OPMI LUMERA 300

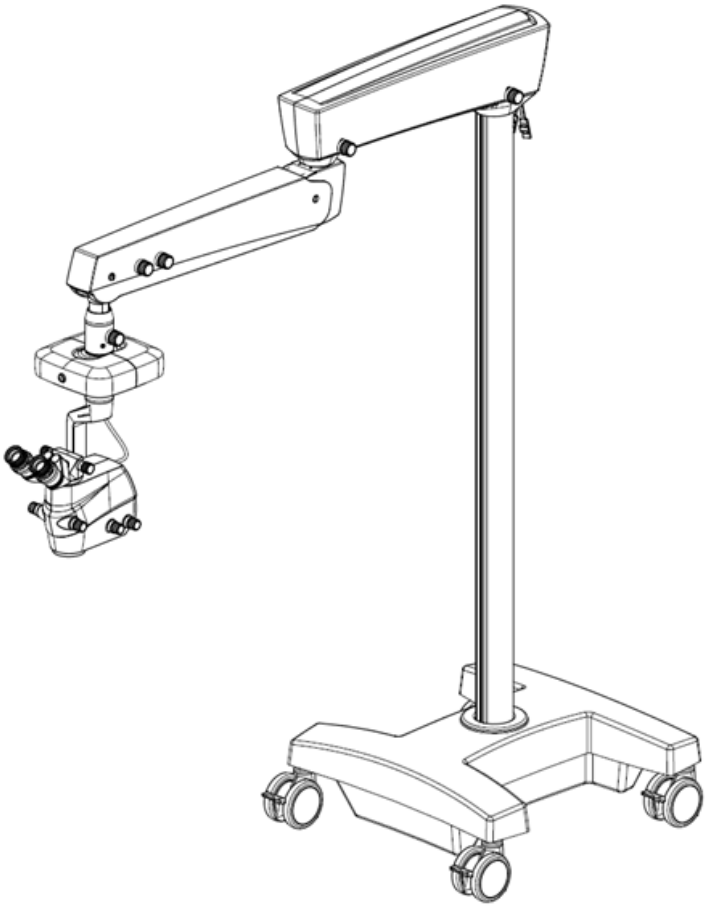

Instructions for Use

G-30-1947-en

Version 1.3

04/22/2015

About this manual

These Instructions for Use are part of the delivery package.

- Carefully read them before using the OPMI LUMERA 300.
- Keep them at the site of use of the device.
- Store them for the entire service life of the device.
- Pass them on to every subsequent owner or user of the device.

Orientation aids

– The chapter overview at the beginning of these Instructions for Use provides a summary of all subjects.

– The contents of each chapter are specified in detail at the beginning of each chapter.

– A list of abbreviations, key words and technical terms in the annex facilitates the search for specific terms.

Applicable area

These Instructions for Use apply to OPMI LUMERA 300 with the following identification:

Configuration
1. OPMI LUMERA 300 Basic Microscope Head with manual Magnification Changer & integrated LED Light Source
2. OPMI LUMERA 300 Basic Microscope Head with motorized Magnification Changer & integrated LED Light Source
3. OPMI LUMERA 300 Basic Microscope Head with motorized Magnification Changer, integrated LED Light Source, & Assistant Interface
4. OPMI LUMERA 300 Standard Microscope Head with motorized ZOOM, integrated LED Light Source, & Assistant Interface
5. OPMI LUMERA 300 Advanced Microscope Head with motorized ZOOM, integrated LED Light Source, Assistant & RESIGHT Interface

Trademarks

OPMI®, **LUMERA**®, **Invertertube**®, **VisionGuard**® and **RESIGHT**® are registered trademarks of ZEISS.

Manufacturer

Carl Zeiss Suzhou Co., Ltd
Modern Industrial Square 3-B,
No.333 Xingpu Road
Suzhou Industrial Park,
Suzhou, China 215126

Phone: + 86 512 6287 1388
Fax: +86 512 6287 1115
Internet : www.zeiss.com/meditec

Subject to changes in design and scope of delivery and as a result of ongoing technical development. Printed in China.

Copyright

© Carl Zeiss Suzhou Co., Ltd 2014
All rights reserved. Reprints and reproductions, including excerpts, are not permissible. However, these Instructions for Use may be digitized and archived for internal use. Access to this data by third parties is not permissible and must be prevented.

Chapter overview

Chapter: Safety Measures **5**

Chapter: System Overview **41**

Chapter: Preparations for use **63**

Chapter: Operation **87**

Chapter: What to do in the event of malfunctions **97**

Chapter: Care and Maintenance **105**

Chapter: System Data **113**

Chapter: Indexes **129**

Safety Measures

KEY TO SYMBOLS **7**
Hazard symbols *7*
Information symbols *7*

TARGET GROUP **8**

FIELD OF USE **9**
Intended use *9*
Normal use *9*

NOTES FOR THE OPERATOR **10**
Duties of the operator *10*
Requirements to be met by the user *13*
Warranty and liability *13*

REQUIREMENTS FOR OPERATION **14**
Prior to the very first use *14*
Before every use *15*
During use *17*
After every use *19*

MEASURES TO PREVENT PHOTOTOXIC INJURY **20**
Illumination characteristics (spectral composition) *20*
Illumination intensity *20*
Angle of illumination *21*
Focus of the light source *21*
Exposure time to light *22*

SAFETY DEVICES **26**
50% mode switch *26*
Filter knob for swiveling the protection filter *26*
Friction adjustment screw for limiting downward movement *26*
Knob for zoom (optional) manual adjustment *26*
Knob for motorized MC (optional) manual adjustment *26*

SYMBOLS AND LABELS ON THE DEVICE 28
Symbols and labels on the suspension system..... 30
Symbols and labels on the microscope..... 36
Symbols and labels on the foot control panel 38

Key to symbols

We would like to inform you about safety aspects which must be observed when handling this device. This chapter contains a summary of the most important information concerning matters relevant to instrument safety.

Hazard symbols

The following safety information has been incorporated into the Instructions for Use. Please note this information and be particularly careful in these cases.

⚠ **WARNING**	Warning label, which may refer to **fatal injuries** or **severe injuries** if precautions are not followed.
⚠ **CAUTION**	Indicating a hazard, which may lead to **moderately severe injuries** if precautions are not followed.
NOTE	Warning label, which may refer to **minor injuries** and **property damages** if precautions are not followed.

Information symbols

The following information symbols are used in these Instructions for Use:

– Listing

✓ Requirements for an action

• Prompt for action

→ Result of an action

ⓘ Additional information and tips. No warnings of hazards are provided.

Target group

These Instructions for Use are intended for physicians, nurses and other medical and technical staff who prepare, operate or maintain the device after the appropriate training and in accordance with the instructions given in these Instructions for Use. It is the duty of the customer or institution operating the system to train and instruct all staff using the system.

Installation and service work not described in these Instructions for Use must only be performed by specialists from ZEISS or staff specially trained for this purpose by ZEISS.

Field of use

Intended use

The OPMI LUMERA 300 is a surgical microscope designed for the illumination and magnification of the surgical area and for the support of visualization in surgical procedures in the field of ophthalmology.

Normal use

In line with the intended use the system, you can use the OPMI LUMERA 300 for surgical procedures on both the anterior segment of the eye (e.g. cataract, cornea, glaucoma) and the posterior segment of the eye (e.g. retina, vitreous). The LED light source integrated in the system provides a dedicated and high-contrast image of the patient eye. The magnification changer or ZOOM allows the surgeon to set the required magnification. The system is intended for use in offices, hospitals or other human medicine institutions. For disposal, please observe these Instructions for Use as well as the applicable legal regulations in your country.

CAUTION

Not for diagnosis purposes!
Live video images and recorded video sequences, video clips (cut sequences) and single images shall not be used for diagnosis purposes. Visualized images may contain variations in shape, contrast and color.

Notes for the operator

The correct use of the device is absolutely vital for safe operation. Therefore, please thoroughly familiarize yourself with the content of these Instructions for Use before starting up the device. Please also observe the Instructions for Use of additional instrument equipment. Further information is available from our service department or from authorized representatives.

Duties of the operator

- Only operate the device within the scope of its intended use.
- Only personnel who have undergone training and instruction are allowed to use this instrument. It is the responsibility of the customer or institution operating the equipment to train and instruct all staff using the equipment.
- Please keep these Instructions for Use where there are easily accessible at all times for the persons operating the system.
- Note the symbols and labels attached to the device!
- Only use approved original accessories or consumables.

Legal regulations

- Observe the legal regulations for accident prevention and occupational health and safety applicable in the country concerned.
- Modifications and repairs of this device or any equipment operated together with this device may only be performed by ZEISS service staff or other persons authorized by ZEISS.
- This system must not be modified without the manufacturer's approval. If the system is modified, suitable inspections and testing must be completed to ensure that it can still be used safely.
  The manufacturer is not liable for damage caused by unauthorized persons tampering with the system. Furthermore, this will forfeit any rights to claim under warranty.
- If required by the regulations and directives applicable in the country of use, connect the system to a special emergency backup power supply.

Notes on the system

- Make sure that the installation conditions and the use of the system meet surgical requirements:
  - low vibration
  - clean environment
  - avoidance of extreme mechanical stress.
- Never look at the sun through the binocular tube, the objective lens or an eyepiece.
- The maximum brightness of the LED may decrease in the course of time (this is a normal property of the system).

Ambient requirements

- Do not operate the system contained in the delivery package
  - in explosion-risk areas,
  - if inflammable anesthetics or volatile solvents such as alcohol, benzine or similar chemicals are present at a distance of less than 25 cm.
- Do not station or use the instrument in damp rooms. Do not expose the instrument to water splashes, dripping water or sprayed water.
- Do not place any fluid-filled containers on top of the instrument. Make sure that no fluids can seep into the instrument.
- Make sure that the installation conditions and the use of the device meet surgical requirements.

Electrical safety

- Always switch off the system before disconnecting it from / connecting it to line power, for cleaning its surface or if it will not be used for a prolonged period of time.
- Switch off the unit at the power switch if you notice any smoke, sparks or unusual noise. Do not use the unit until it has been repaired by ZEISS service team or trained and authorized service technician.
- Do not use multiple sockets!
- Never open the device! The device contains freely accessible live components. If you remove the housing, you run the risk of electric shock.
- Do not pull at the power cord or the foot control panel cable.
- Do not touch the system if your body is electrostatically charged and the system is not grounded.
- Please note the information on EMC (electromagnetic compatibility) in the chapter "System Data" on page 120.

Transport and service

- The device shall only be transported over long distances (e.g. move, returning for repair etc.) within its original packaging or in a special return packaging. For details, please contact your authorized dealer or the ZEISS service team.
- This system is a high-grade technological product. To ensure optimum performance and safe working order, we recommend having it checked by our service representative as part of regular scheduled maintenance.
- In order to prevent any impairment of the device's safety due to age, wear, etc., the user must ensure that the device is subjected to the necessary safety checks (see section "Care and Maintenance").
- Never attempt to forcefully connect any electrical connectors (plugs, sockets). If connection is not readily possible, check whether the plug fits the socket. If any of the connectors are damaged, have the ZEISS service team or authorized service representative repair them.
- If a failure occurs which you cannot correct with the aid of the chapter "What to do in the event of malfunctions", attach a sign to the system stating it is out of order and contact the ZEISS service staff.

Optics and light

- Never directly look with binocular tube, object lens or an eyepiece into the sun.
- Never directly look into the light source, e.g. a microscope object lens to avoid phototoxic damages to the eyes.
- Start with the lowest brightness and slowly increase it to the required but not more than the allowed brightness.
- With increasing age of the light source, the actual illumination intensity delivered at the respective setting decreases (this is a normal property of the system).
- The device is equipped with temperature monitoring for the LED light source. If the temperature is too high, the light source switches off automatically. When the LED has cooled down, the light source automatically switches on again. Therefore, constantly monitor the system when the light source is switched on in order to prevent any phototoxic injury to the patient's eye.

Accessories

- Any additional equipment connected to medical electrical devices must demonstrably comply with the applicable standards and directives (e.g. EN 60950:2005 for data processing equipment). In addition, all configurations must meet the normative requirements for medical systems (see EN 60601-1-1:1990 or Clause 16 of the 3rd edition of EN 60601-1:2006).

The one who is connecting additional devices to electronic medical devices acts as system configurer and is responsible for the system complying with the normative requirements for electronic medical devices.

Please note that local legislation takes priority over the above-mentioned normative requirements. If you have any questions, please contact ZEISS Service or your local authorized dealer.

- Never attempt to forcefully connect any electrical connectors (plugs, sockets). If connection is not readily possible, check whether the plug fits the socket. If any of the connectors are damaged, have the Carl Zeiss service team repair them.
- When mounting accessory equipment, please make sure that the admissible total weight of the surgical microscope is not exceeded. (See label "Maximum load" or chapter "Technical data").
- When mounting non-Zeiss equipment, make sure that sufficient free space is available for focus positioning.

Requirements to be met by the user

- Only personnel who have undergone training and instruction are allowed to use this instrument. It is the responsibility of the customer or institution operating the equipment to train and instruct all staff using the equipment.
- Please keep these Instructions for Use where they are easily accessible at all times for the persons operating the system.
- Modifications and repairs of this device or any equipment operated together with this device may only be performed by ZEISS service staff or other persons authorized by ZEISS.

Warranty and liability

Warranty and liability depend on the applicable contractual stipulations.

NOTE

Loss of warranty

The manufacturer is not liable for damage caused by unauthorized persons tampering with the system. Furthermore, this will forfeit any rights to claim under warranty.

Requirements for operation

WARNING

The device must not be modified without any approval!
This device must not be modified without the manufacturer's approval.
If the device is modified, appropriate examinations and tests must be performed to guarantee the further secure use of the device.

The manufacturer is not liable for damages caused by an unauthorized use of the device. Furthermore, this will forfeit any rights to claim under warranty.

Prior to the very first use

ZEISS Service or a person authorized by ZEISS will install the system. Please make sure that the following requirements continue to be met for further operation:

- ✓ The connecting components have been properly connected. The screw connections have been firmly tightened.
- ✓ All cables and connectors are in a perfect condition, i.e. they do not display any worn areas, kinks or other defects.
- ✓ The device is connected with the power cord supplied. The power cord being used is the one designed for use with this system.
- ✓ When using drapes for the surgical microscope, make sure to remove the protective cover from the drape window below the objective lens.
- ✓ The main plug shall only be connected to a socket with a faultless protective ground conductor.

Before every use

- When adding accessories and/or components please ensure the permissible total weight of the device is not exceeded (see label "Maximum load" or section "Technical Data").
- Before every use, make certain to compensate for any added weight; this will enable the surgical microscope to maintain its balance in all positions of the working range.
- Before every use, limit the stroke of the suspension arm to prevent any contact with the patient if the surgical microscope is lowered accidentally.
- Do not touch the area between the carrier and suspension arms while you are transporting the system or swiveling the carrier arm.
- Position the instrument in such a way that you can move it away from the patient at any time.
- Check the surgical microscope for sufficient freedom of movement. The device itself or accessories may be damaged if conflicting with each other.
- When connecting accessories make sure that sufficient free space is provided and that the surgical microscope does not touch the patient.
- Before using a fundus viewing system, make sure that the room for movement is larger than the downward travel path of the microscope.
- To prevent accessories from falling down, check before every use that accessories are securely locked in position and securing screws are firmly tightened.
- Never attempt to forcefully connect any electrical connectors (plugs, sockets). If connection is not readily possible, check whether the plug fits the socket. If any of the connectors are damaged, have the ZEISS service team or the authorized service technician repair them.
- Always run cables in a manner that will not impede the user's movements.
- Check that the movement of the surgical microscope is unobstructed to avoid any collisions and damage to cables.
- When mounting non-Zeiss equipment, make sure that sufficient free space is available for focus positioning.
- Have an OR illuminator or endo-illuminator ready during every procedure.

- Before every use, check the filter settings in order to prevent phototoxic injury to the patient's eye.
- Depending on the type of application, take appropriate precautions to ensure that the surgical procedure or treatment can still be completed even if the full functionality of this microscope (e.g. illumination) is not available.
- If you operate the device in a sterile area, make sure that you use the corresponding sterile accessories for the device.
- Make sure that the operating staff is briefed about sterile use of the system.
- Ensure that heat sink openings and louvers are free from dirt.
- Make sure that all symbols and labels on the instrument are legible and understood by operating personnel.
- Please refer to the functional test in chapter "Operation" .
- Avoid collisions of any kind.
- To cross over steps and edges, two persons are needed to jointly hold and lift the device: Risk of tripping!
- Be extremely careful when moving over slopes.
- Do not park the stand on slopes.
- Secure the system in position by pressing at least three of the locking tabs on the stand base to prevent the stand from rolling away inadvertently.
- When draping the system, make sure there is enough slack in the drapes to allow for movement of the microscope carrier and surgical microscope.
- Refer to the Instructions for Use for the sterile drape, and attach the drape to the device in such a fashion that your field of view is not compromised.

During use

- Only use the system after it has been properly balanced.
- Never operate the system unattended.
- Excessive radiation exposure times may lead to retinal injury in the patient's eye. Never leave a system unattended when the light source has been activated.
- Never directly look into the light source, e.g. a microscope object lens or a light guide to avoid phototoxic damages to the eyes.
- Never leave a device unattended with the light source still switched on.
- In order to prevent phototoxic damages to the patient's eye, reduce the brightness and the light exposure of the surgical area to an amount that is absolutely necessary for the surgery.
- Phototoxic effect of light beams. When operating on the eye, always use the retina protection filter (blue barrier filter) installed in the light source to ensure that the patient’s eye is not exposed to unnecessary (blue) radiation.
- Adjust the illumination intensity and the resulting radiation exposure time by selecting the appropriate illumination setting. You will find the values recommended by ZEISS in the table "Maximum radiation exposure times" on page 24.
- Defective or unidentified accessories may lead to increased leakage current on the system and injure the patient. Never connect any defective or unidentified accessories and never touch the power outlet or video interfaces while in contact with the patient.
- If you have mounted the RESIGHT fundus viewing system on the underside of the microscope and steeply tilt the microscope, the RESIGHT fundus viewing system may unintentionally move in and injure the patient. Remove the RESIGHT fundus viewing system before steeply tilting the microscope.
- Malfunctions in the motor's electronic system may cause the main functions to fail (XY movement, focus, zoom) and affect other functions. Change to manual mode.
- In the event that the focusing function can no longer be controlled via the foot control panel, use the suspension arm to focus the surgical field. This may lead to patient injury or damaging attached equipment. Ensure to provide sufficient clearance between equipment and patient (min. 50 mm) when focusing manually. Ensure that any accessories installed do not come into contact with other objects.

- In the event that the X-Y movement of the surgical microscope can no longer be controlled via the foot control panel, position the device manually via the suspension arm. Again, you should ensure to provide sufficient clearance between equipment and patient (min. 50 mm).
- If a failure occurs which you cannot correct with the aid of the chapter "What to do in the event of malfunctions“, attach a sign to the device stating it is out of order and contact our service representative.
- Do not pull at the power cord or the foot control panel cable.
- Always switch off the system
  - before disconnecting it from / connecting it to line power
  - if it will not be used for a prolonged period of time
  - or for cleaning purposes.
- Risk of crushing - mind your fingers!
  Fingers may be crushed in the areas marked with the "Risk of crushing" label.
  Do not touch these areas while the system is being moved.

After every use

- Always use the master switch to turn off the device if it is not in use.
- Insufficient, incorrect or wrong cleaning or disinfection contrary to the directions in these Instructions for Use may expose the patient or medical staff to a considerable risk of infection. For more information, please see "Maintenance of the device" in the chapter "Care and maintenance".
- Step on at least three pedals to secure the floor stand in position. Make sure that the floor stand is stable and cannot roll away.

Measures to prevent phototoxic injury

Several papers[1)-5)] dealing with the problem of phototoxicity in ophthalmic surgery have been published. A comprehensive review of these publications reveals five aspects of particular concern:

- Illumination characteristics (spectral composition)
- Illumination intensity
- Angle of illumination
- Focus of the light source
- Exposure time to light

In the following, comments on these aspects are given and a description of how ZEISS, as a manufacturer, makes allowance for them in its systems.

Illumination characteristics (spectral composition)

Studies on the exposure of the eye to light of varying spectral composition date back to the early 1950s. These studies suggest that the potential hazard of phototoxic injury to the patient's retina can be reduced by blocking out the blue and ultraviolet light below a wavelength of 475 nm.

For protection of the retina, ZEISS offers the swing-in blue block filter as standard feature of the surgical microscope. This reduces not only the exposure of the patient's eye to light, but also that of the surgeon's.

An important point to note here, however, is that the use of filters will inevitably change the perceived color of the light. For this reason, the surgeon may initially have to get used to the changed appearance of the anatomical structures.

Illumination intensity

The majority of researchers suggest that the surgeon should use the lowest light intensity required at the patient's eye to guarantee good viewing during surgery.

ZEISS has addressed this aspect by providing this system with a device for continuously varying the brightness of the light source. This permits the surgeon to optimally adapt the light intensity at the patient's eye to the conditions existing in each case.

Angle of illumination

A number of publications[1)-4)] suggest that the microscope should be tilted to reduce the exposure of the macula to direct illumination.

The surgical microscope features a tilting mechanism for the main microscope to enable indirect illumination.

Focus of the light source

Studies show that injuries are likely to occur if the filament of the light source is imaged on the patient's retina. The peak intensity of a filament is considerably higher than that of an even and extended light source.

Exposure time to light

According to some publications, the eye should not be exposed to the light source longer than a few minutes. In all surgical cases, the retinal exposure time to light depends on the type and duration of the procedure and possible case complications. It is therefore recommended in ophthalmic surgery to keep the light intensity as low as possible, or to use a device which prevents the light from entering through the patient's pupil. It is also recommended to make sure that the patient's eye is not additionally exposed to the light of surrounding light sources.

This problem has been solved by ZEISS by the use of a swing-in retina protection filter (blue barrier filter) that can be swung into the microscope's illumination beam path.

Brightness control

If the light source is switched on, the brightness can be continuously set by the foot control panel.
The stipulations of standard DIN EN ISO 15004-2:2007 result in maximum radiation exposure times for the different illumination configurations as specified in the table "Maximum radiation exposure times".

With increasing age of the light source, the actual illumination intensity delivered at the respective setting decreases (this is a normal property of the system).

Phototoxic risk factors

The microscope light source - like any bright light source - may present a potential hazard to the patient's eye both in the form of immediately visible thermal damage to the retina as well as phototoxic chemical reactions which may lead to photoretinitis. The factors which play an important role in determining the phototoxic risk are:

- Lamp brightness
- Spectral distribution of the light (UV and blue light is more dangerous than longer wavelengths)
- Duration of direct exposure
- Pupil size
- Clarity of ocular media (infants and young children, for example, may be at a higher risk)
- Condition of the eye: aphakic and pseudo-aphakic eyes with IOLs are at a higher risk
- Previous exposure to bright light such as retinal photography, especially within the last 24 hours

During cataract procedures, factors such as lenticular material, instruments such as the phaco handpiece, and movement of the eye provide interruption of the exposure and would be expected to significantly lengthen the time before photoretinitis might be expected to occur.

Effects of microscope illumination

A prospective study [7)] of the effects of microscope illumination during surgery did not reveal any phototoxic retinal injuries for procedure times of up to 30 minutes if the calculated maximum recommended exposure time was 150 seconds. However, it was also found that at the same brightness setting, phototoxic retinal injury could be expected after approximately 100 min.

Maximum radiation exposure times

The following table is intended to provide the surgeon with a guideline in determining the potential hazard. The data has been calculated for the worst case:

- direct radiation exposure,
- uninterrupted radiation exposure, e.g., no surgical instruments in the eye,
- aphakic eye,
- totally immobile eye, which means that only one area is subject to exposure,
- Dial for red reflex,
- pupil dilated to 8 mm.

The calculations are based on the daily exposure limits recommended for occupational safety as defined in [6)]. A safety factor of 10 has been used in determining these limits.

The use of the blue barrier filter increases the recommended exposure time with the values specified below.

Maximum radiation exposure times of the LED light source

Brightness level in %	Max. exposure time in minutes	
	Without retina protection filter	With retina protection filter
100	1.33	27.1

List of references

[1] H. Stiller, and B. Rassow, "Light hazards to the patient's retina from ophthalmic instruments," Applied Optics-OT 30, 2187-2196 (1991).

[2] American Conference of Governmental Industrial Hygienists, "Documentation of the Threshold Limit Values for physical agents. 7th Edition," (American Conference of Governmental Industrial Hygienists, Cincinnati, 2001).

[3] S. G. Khwarg, F. A. Linstone, S. A. Daniels, S. J. Isenberg, T. A. Hanscom, M. Geoghegan, and B. R. Straatsma, "Incidence, risk factors, and morphology in operating microscope light retinopathy," Am. J. Ophthalmol. 103, 255-263 (1987).

[4] G. Kleinmann, P. Hoffman, E. Schechtman, and A. Pollack, "Microscope-induced retinal phototoxicity in cataract surgery of short duration," Ophthalmology 109, 334-338 (2002).

[5] DIN EN ISO 15004-2:2007 Optical instruments -- Fundamental requirements and test methods -- Part 2: Light hazard protection

[6] David Sliney, Danielle Aron-Rosa, Francois DeLori, Franz Fankhauser, Robert Landry, Martin Mainster, John Marshall, Bernard Rassow, Bruce Stuck, Stephen Trokel, Teresa Motz West, and Michael Wolffe, Adjustment of guidelines for exposure of the eye to optical radiation from ocular instruments: statement from a task group of the International Commission on Non-Ionizing Radiation Protection (ICNIRP) APPLIED OPTICS Vol. 44, No. 11, p 2162 (10 April 2005)

[7] Byrnes, G.A., Antoszyk, A.N., Mazur, D.O., Kao, T.C., Miller, S.A., Photic maculopathy after extracapsular cataract surgery. A prospective study, 1992/05/01 Ophthalmology, VL - 99, IS - 5, SP - 731, EP - 737, PB - Elsevier

Safety devices

50% mode switch

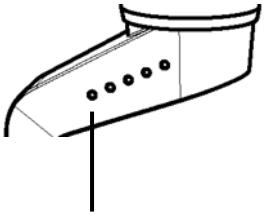

1 50% mode switch
When actuated, this switch sets the LED light source to a fixed value (50% of maximum illumination). 50% mode is active when the 50% mode switch emits amber light and the indicator LED (E) flashes.

The following functions are deactivated in 50% mode:

- Light on/off
- Light brighter/darker
- Motorized focus, motorized MC, motorized zoom

Upon returning to normal operation the device automatically sets the lowest illumination level (<25%) for the LED light source. Normal mode is active when the indicator LED (E) emits steady light and the 50% mode switch no longer emits amber light.

Filter knob for swiveling the protection filter

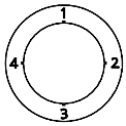

2 Filter knob for swiveling the protection filter into the beam path

The filter knob has four positions in order:

1. No filter
2. CRI filter (optional)
3. Halogen-mode filter (optional)
4. Retina protection filter (blue block filter): Use the retina protection filter when operating on the eye to protect the patient's eye against unnecessary exposure to radiation (blue light).

Friction adjustment screw for limiting downward movement

3 Friction adjustment screw for limiting downward movement
The screw is used to set the lower limit position of the suspension arm. This prevents the surgical microscope from getting into contact with the patient even if it is inadvertently lowered.

Knob for zoom (optional) manual adjustment

4 Knob for zoom (optional) manual adjustment
In the event of failure of zoom, you can use this zoom adjustment knob on the microscope to manually set the required magnification (use e.g. a coin).

Knob for motorized MC (optional) manual adjustment

5 Knob for motorized MC (optional) manual adjustment
In the event of failure of motorized MC, you can switch this knob on the microscope to manually set the required magnification.

Fig. 1: Safety equipment on the device

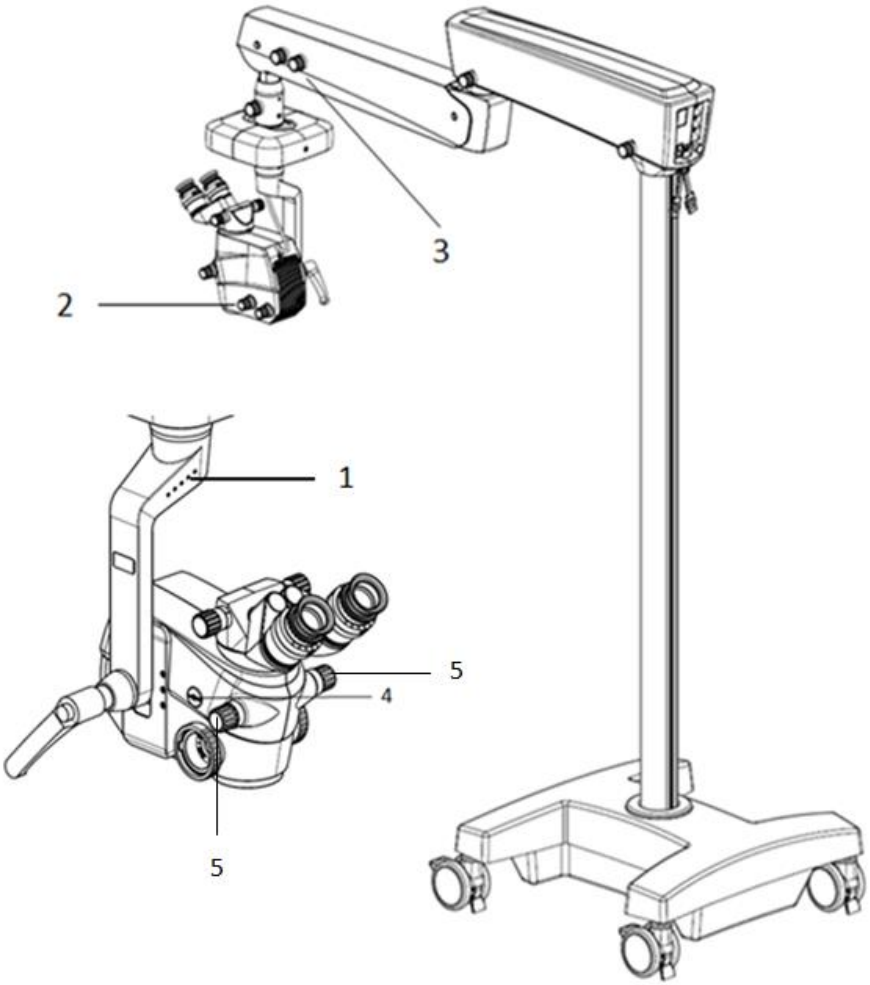

Symbols and labels on the device

CAUTION

Observe all warnings and information labels!

- If you notice that any label is missing on your device or has become illegible, please contact the ZEISS service department.

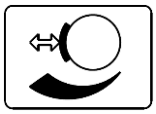

1 Friction symbol
Explanation of the braking effect that is achieved by turning the friction control.
- Turn left: Reducing the braking effect
- Turn right: Increasing the braking effect

2 "Risk of crushing" warning label
Fingers may be crushed. Do not touch this area while moving the surgical microscope or parts of it.

Fig. 2: Symbols and labels on the device

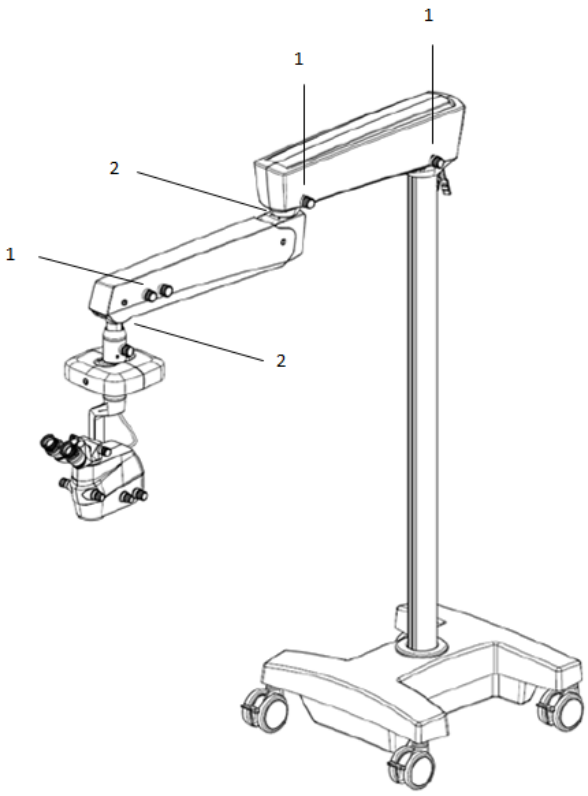

Symbols and labels on the suspension system

1 "Maximum load" warning label
The maximum admissible load (including accessory equipment) on the suspension arm:
- For floor stand S200-cataract: must not exceed 9.5!
- For floor stand S200-retina: must not exceed 13.5!

2 "Observe the Instructions for Use" label
Observe the Instructions for Use or further applicable documents.

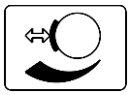

3 Friction symbol
Explanation of the braking effect that is achieved by turning the friction control.
- Turn left: Reducing the braking effect
- Turn right: Increasing the braking effect

Fig. 3: Symbols and labels on the suspension system

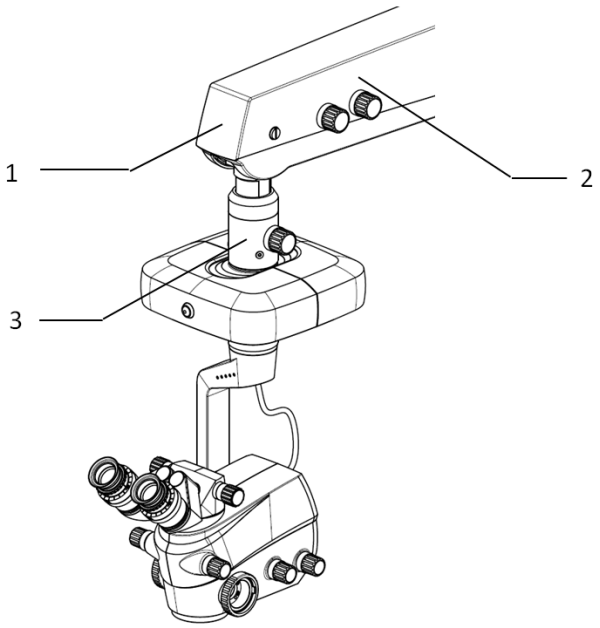

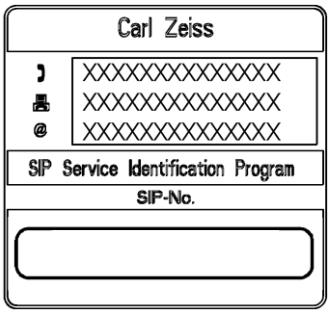

4 SIP label

The SIP label contains the following information:

- Manufacturer (company name)
- Manufacturer's contact data,
  i.e., phone number, fax number and email address of the local contact of the national Carl Zeiss sales organization.
- SIP number
  A unique identification number assigned to your system.

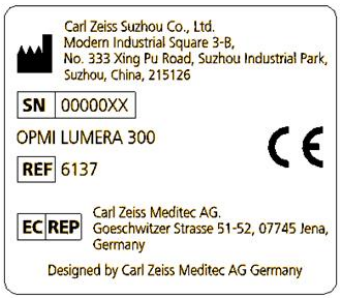

4 "OPMI LUMERA 300" identification label

This label contains the following information:

– Manufacturer symbol	
– Manufacturer (company name)	Carl Zeiss Suzhou Co., Ltd (Designed by Carl Zeiss Germany)
– Manufacturer's address	Modern Industrial Square 3-B, No.333, Xingpu Road SIP, Suzhou Industrial Park, Suzhou, China, 215126
– Serial number	SN
– Device name	OPMI LUMERA 300
– Reference number	REF
– CE mark	CE

5 Date of manufacturing

This graphical symbol indicates the manufacturing date of the device.

6 "Observe disposal regulations" label

Electrical or electronic devices must not be disposed of as normal domestic waste. For more information on the disposal of electrical and electronic devices, please see the chapter "Maintenance and care".

7 "Moving position" label

Always hold the stand at the indicated point for transportation.

Observe the Instructions for Use or accompanying documents.

Indicates the moving position of the system. Before transporting the system, make sure that it is in this position in order to avoid any damage.

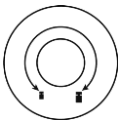

8 Balancing of the suspension arm

After all accessories have been attached to the surgical microscope, this adjustment screw can be used to balance the suspension arm.

Fig. 4: Symbols and labels on the suspension system

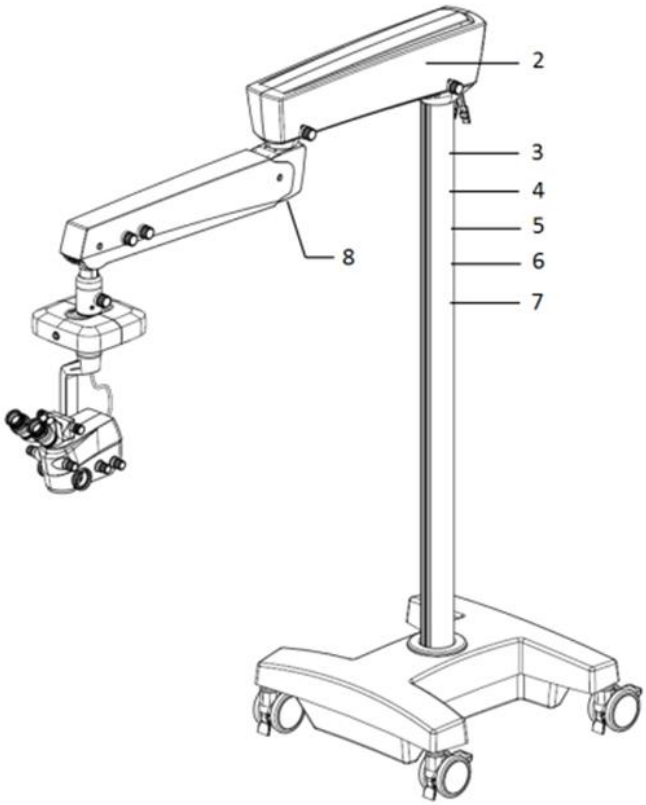

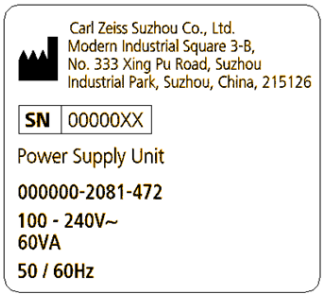

9 Power Supply Rating label

This label contains the following information:

– Manufacturer symbol	
– Manufacturer (company name)	Carl Zeiss Suzhou Co., Ltd
– Manufacturer's address	Modern Industrial Square 3-B, No.333 Xing Pu Road, Suzhou Industrial Park, Suzhou, China 215126
– Serial number	SN
– Device name	Power Supply Unit
– Rated voltage	100VAC – 240VAC
– Connected load	60VA
– Line frequency range	50Hz / 60Hz

Fig. 5: Symbols and labels on the back of carrier arm

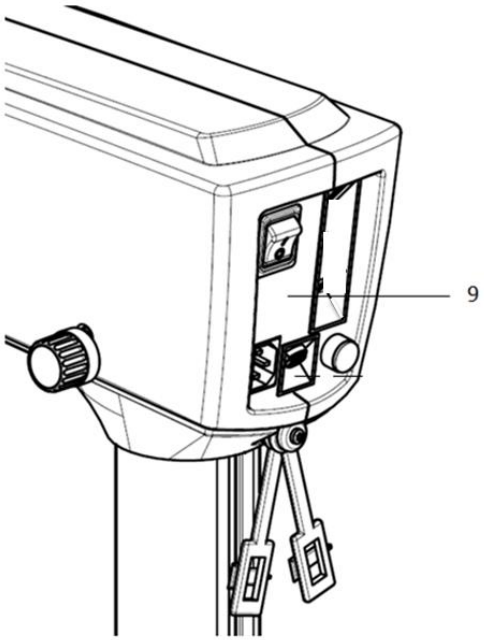

Symbols and labels on the microscope

1 Manual magnification changer unit label
Indicates the manual magnification setting of the surgical microscope.

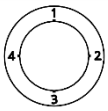

2 Dial for retina protection filters
Identifies the dial for the retina protection filters, including blue block filter, optional CRI filter and halogen-mode filter. The blue block filter removes harmful blue light which may enter the pupil and thus provides additional protection for the patient's eye against phototoxic damage.

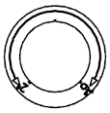

3 Dial for red reflex illumination
Identifies the dial for the red reflex illumination. By dialing different combination between 2° and 6°, you could get different red reflex effect.

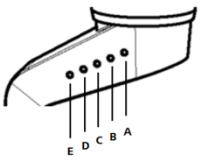

4 Brightness indicator of the LED light source
The brightness indicator shows the following light intensities:

- **A**: 100% light intensity
- **B**: 75%-99% light intensity
- **C**: 50%-74% light intensity
- **D**: 25%-49% light intensity
- **E**: <25% light intensity

The brightness indicator **E** also indicates whether light source is taken on. For instance, if the light intensities is set on 75%, indicator **B C D E** are lighted and **A** is unlit when light source is taken on; indicator **B C D** are lighted and **A E** are unlit when light source is taken off.

(A flashing LED indicates that there is a malfunction of the LED light source or that 50% mode is active.)

5 "Observe the Instructions for Use" label
Observe the Instructions for Use or further applicable documents.

OPMI LUMERA 300

6 "OPMI LUMERA 300" system name
This imprint identifies the system.

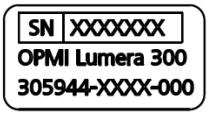

7 OPMI component label
This label identified OPMI configurations.

- 305944-9001-000: OPMI LUMERA 300 Basic Microscope Head with manual Magnification Changer & integrated LED Light Source
- 305944-9002-000: OPMI LUMERA 300 Basic Microscope Head with motorized Magnification Changer & integrated LED Light Source
- 305944-9003-000: OPMI LUMERA 300 Standard Microscope Head with motorized Magnification Changer, integrated LED Light Source, & Assistant Interface
- 305944-9004-000: OPMI LUMERA 300 Standard Microscope Head with motorized ZOOM, integrated LED Light Source, & Assistant Interface
- 305944-9005-000: OPMI LUMERA 300 Advanced Microscope Head with motorized ZOOM, integrated LED Light Source, Assistant & RESIGHT Interface

8 Knob for zoom manual adjustment (optional)
In the event of failure of zoom, you can use this zoom adjustment knob on the microscope to manually set the required magnification (use e.g. a coin).

Fig. 6: Symbols and labels on the microscope

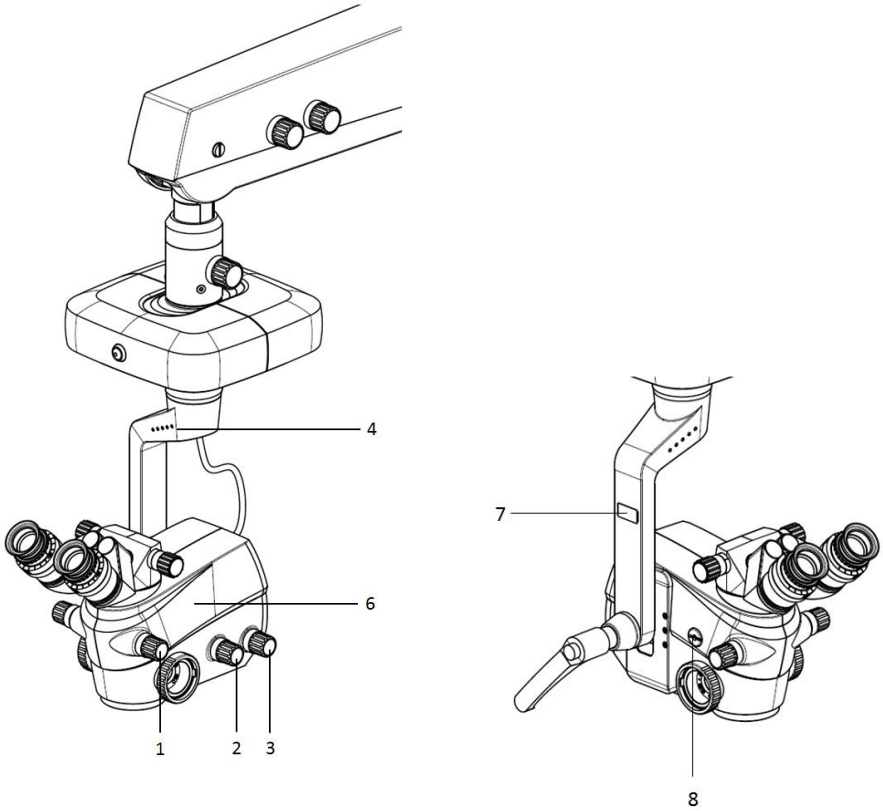

Symbols and labels on the foot control panel

1 Symbol "Follow the Instructions for Use"
This graphical symbol means: Observe the Instructions for Use.

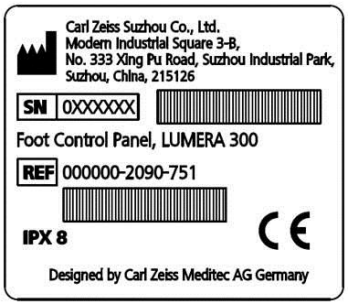

2 Foot control panel component label
This label contains the following information:

– Manufacturing symbol	
– Manufacturer (company name)	Carl Zeiss Suzhou Co., Ltd (Designed by Carl Zeiss Germany)
– Manufacturer's address	Modern Industrial Square 3-B, No.333, Xingpu Road SIP 215126 Suzhou, P.R. Of China
– Serial number	SN
– Device name	Foot control panel, LUMERA 300
– Reference number	REF
– Protection type	IPX8

3 "Observe disposal regulations" label
Do not dispose of electrical and electronic devices along with normal domestic waste. For more information on the disposal of electrical and electronic devices, please see chapter "Maintenance and care".

4 Date of manufacturing
This graphical symbol indicates the manufacturing date of the device.

Fig. 7: Symbols and labels on the foot control panel

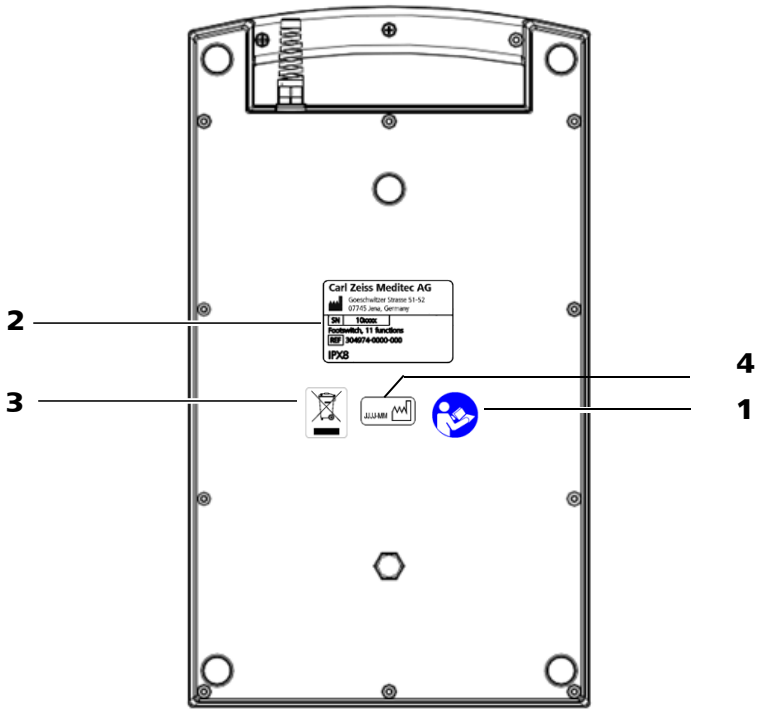

System Overview

SYSTEM OVERVIEW **42**

MICROSCOPE COMPONENTS **44**
Controls on the microscope *46*
180° tiltable tube and 45° inclined tube *48*
Inverter tube - 110° tilting tube *48*
Controls for the XY coupling (optional) *50*

COMPONENTS OF THE SUSPENSION SYSTEM **52**
Controls on the suspension arm, carrier arm, and stand base *54*
Controls and connector panel on the back of carrier arm *56*

COMPONENTS AND CONTROLS OF THE FOOT CONTROL PANEL **58**

ACCESSORIES FOR COOBSERVATION AND DOCUMENTATION **60**

System overview

The OPMI LUMERA 300 comprises the following key components:

1 Microscope (i.e.OPMI)

for the illumination and visual magnification of the field of view.

The LED light source is used to illuminate the surgical area. A blue barrier filter (retina protection filter) can be swung into the beam path. The filter markedly reduces the exposure of the patient's and surgeon's eyes to light. The LED light source with heat sink is located at the back.

For visual magnification, the surgical microscope can be equipped with different tubes, eyepieces and objective lense depending on the order.

The Yoke is located on the suspension arm and equipped with surgical microscope and a handgrip. The Yoke is equipped with brightness indicator of the LED light source.

If requested, it is possible to connect a video camera to the microscope. Note that this can only be done by ZEISS service.

2 XY coupling (optional)
for precise movement of the microscope in the horizontal XY plane.

3 Suspension system
for powering and controlling the microscope functions. The suspension system comprises the carrier and suspension arms, the stand column and stand base.

The carrier arm contains part of the control unit with electrical supply systems required for the control of the microscope. The carrier arm is equipped with the optional HDMI connector for optional video unit. The carrier arm features 50% mode switch, connectors for the foot control panel with 12 functions and the power cord. To prevent the power cord from being disconnected inadvertently, two strain relief devices are attached to the connector panel.

The suspension arm allows the surgical microscope to be positioned or brought into its standby position (suspension arm in upward position). The light turns off in the standby position, and functions like XY are reset to their stored start value. The downward movement of the suspension arm can be limited as required.

The stand base is equipped with four steerable casters which make it easier for you to position the system in the OR. The locking tabs of the casters enable you to prevent the system from moving or rolling away of its own accord.

4 Foot control panel
for controlling the major motorized functions of the microscope.

Fig. 8: OPMI LUMERA 300 system overview

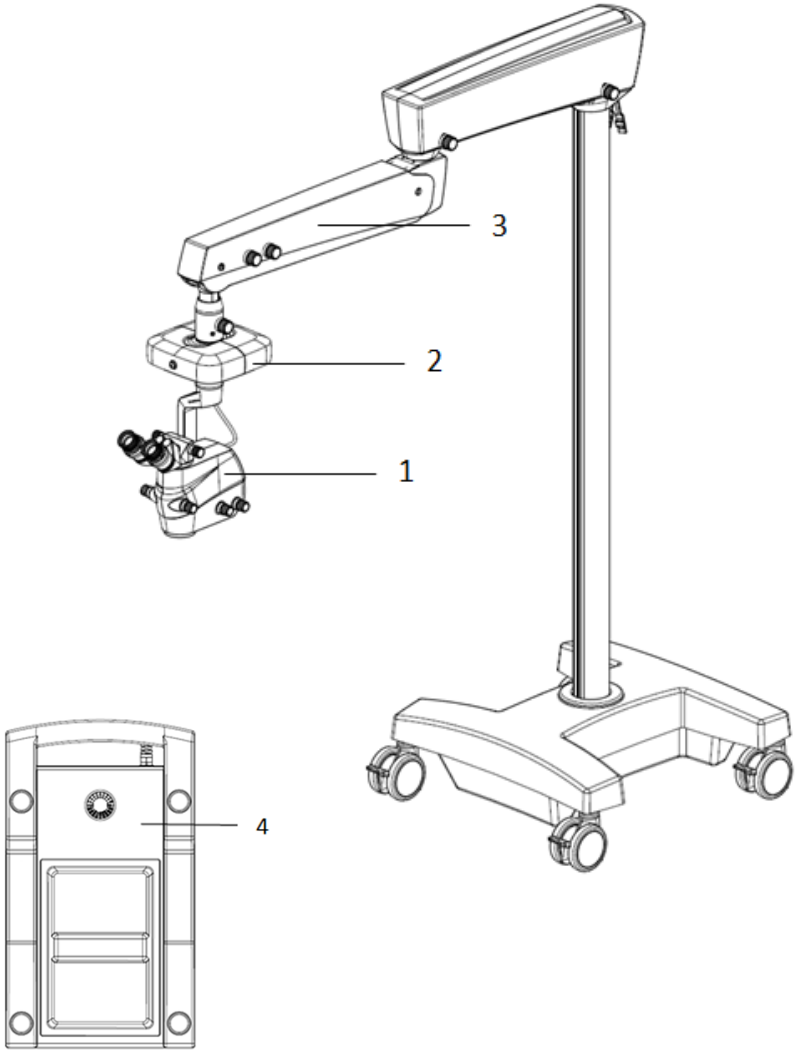

Microscope components

1 Tube

- Inclined tube with a 45° viewing angle (standard)
  The tube cannot be swiveled and is therefore mainly suitable for tasks performed with the microscope in a vertical position.
- 180° tiltable tube (optional)
  This tube can be turned by 180°, allowing surgeons to sit upright even if the microscope is tilted.
- Invertertube (optional)
  This tube is suitable for use in combination with a wide-angle observation system, as it straighten an inverted image.

2 Eyepieces with magnetic coupling

The eyepieces with a magnification factor of 10x or 12.5x.

3 Objective lens
The objective lens defines the working distance of the surgical microscope. The following apochromatic objective lens with different focal lengths are available for different working distances:

- f = 200 mm

4 LED light source with heat sink
The LED light source has been especially designed for use in ophthalmology and is integrated in the microscope as a standard feature. It serves to illuminate the surgical field and can be adjusted via the foot control panel.

5 Connector for RESIGHT 500 fundus viewing system (optional)

This connector permits you to control the manual focusing function of REIGHT 500 via OPMI LUMERA 300.

6 Yoke

Fig. 9: Microscope Components

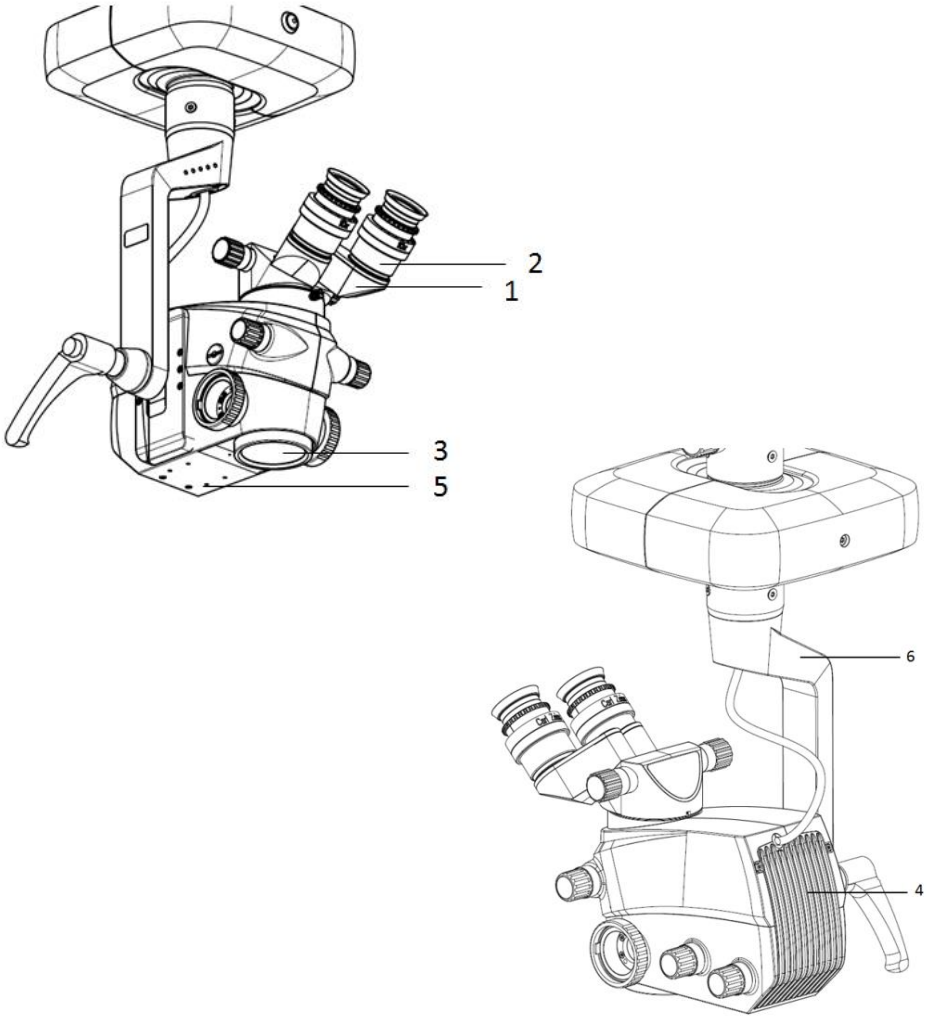

Controls on the microscope

1 Friction adjustment screw for rotation
Use this screw to set the friction of the Yoke's horizontal rotation.

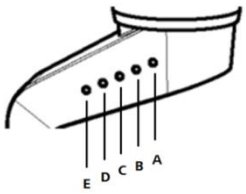

2 Brightness indicator of the LED light source
The brightness indicator shows the following light intensities:

- **A**: 100% light intensity
- **B**: 75%-99% light intensity
- **C**: 50%-74% light intensity
- **D**: 25%-49% light intensity
- **E**: <25% light intensity

The brightness indicator **E** also indicates whether light source is taken on. For instance, if the light intensities is set on 75%, indicator **B C D E** are lighted and **A** is unlit when light source is taken on; indicator **B C D** are lighted and **A E** are unlit when light source is taken off.

(A flashing LED indicates a malfunction of the LED light source; if an LED flashes while the 50% mode switch is lit at the same time, 50% mode is activated.)

3 Interpupillary distance adjustment knob for the eyepieces

4 Handgrip release button

5 Adjustable handgrip
After pressing release button (4), you can adjust the handgrip to several different positions. When you let go of the release button, the handgrip is locking in position.
The handgrips can be fitted with sterilizable handgrip covers.

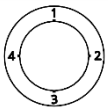

6 Rotary knob for filter selection

Serves to swing filters into the illumination beam path. The selector has following four positions:

1. No filter
2. CRI filter (optional)
3. Halogen-mode filter (optional)
4. Retina protection filter (blue block filter): Use the retina protection filter when operating on the eye to protect the patient's eye against unnecessary exposure to radiation (blue light).

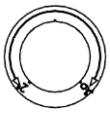

7 Rotary knob for red reflex
Serves to switch the red reflex levels. NOTE that this also influences the homogenity of the illuminated area, which is a normal behavior.

8 Securing screw for tubes or accessories

Screw in the securing screw as far as it will go after you have inserted the binocular tube or another module in the mount on the OPMI.

9 Adjustment knob for Magnification Changer (MC)

Serves to switch the magnification levels.

10 Assistant interface (optional)

The assistant interface for mounting the assistant package.

11 Drilled holes for fastening accessory (optional)

The bottom of the OPMI contains four holes for mounting accessories (e.g. RESIGHT 500).

12 Knob for zoom manual adjustment (optional)

In the event of failure of zoom, you can use this zoom adjustment knob on the microscope to manually set the required magnification (use e.g. a coin).

Fig. 10: Controls on the microscope

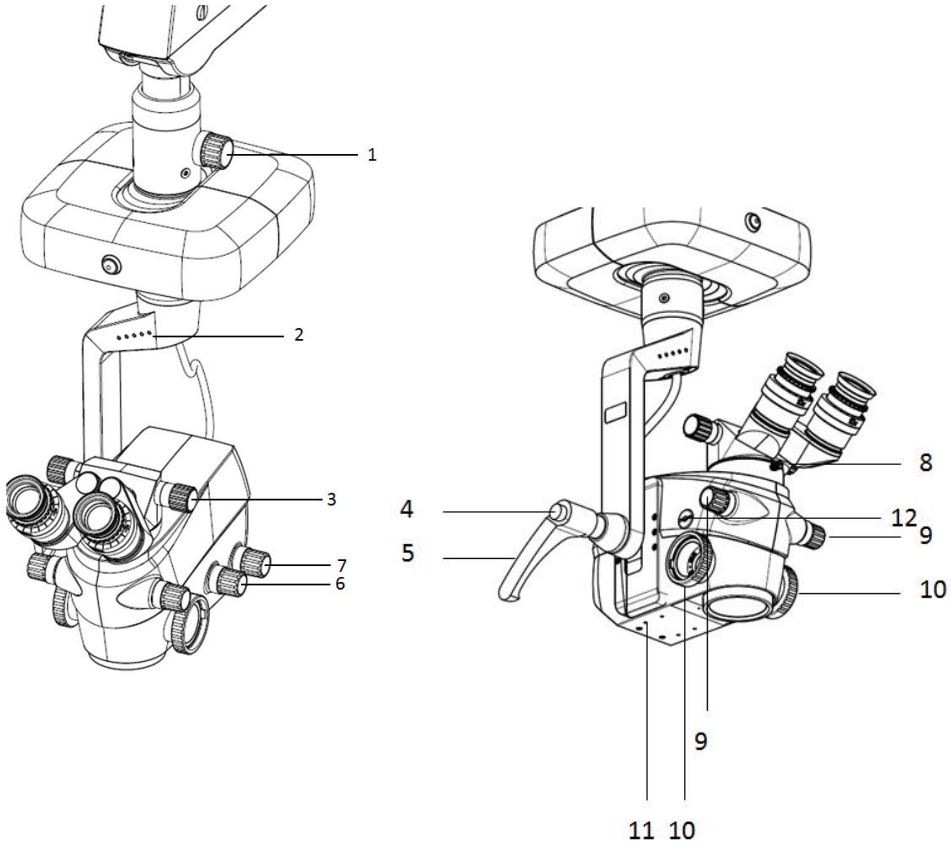

Controls for the tubes

CAUTION

Injury to the eye due to light radiation!
Looking into a light source through a tube, an objective lens or an eyepieces may cause eye injury.

- Never look into a light source or the sun with a tube, an objective lens or an eyepiece.

180° tiltable tube and 45° inclined tube

1 Eyepiece mount

2 Pupillary distance (PD) adjustment knob
The correct position has been reached when the two eyepiece images merge into one. You can read off the PD setting on the adjustment knob.

Inverter tube - 110° tilting tube

3 Eyepiece mount

4 Pupillary distance (PD) adjustment knob

5 Warning symbol - inverter tube to be used for main microscope only

6 Inverter adjustment knob

7 Symbol for deactivated inverter

8 Symbol for activated inverter

Fig. 11: Controls for the tubes

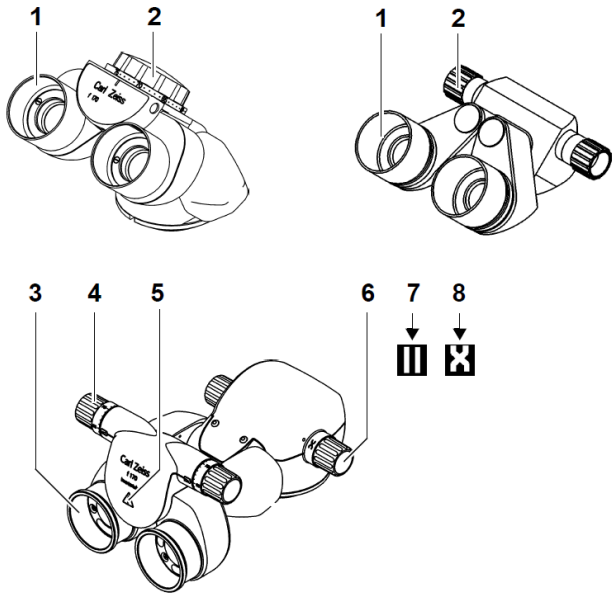

Controls for the widefield eyepieces

NOTE

Widefield eyepieces with magnetic coupling!

Please keep in mind the usual rules for the handling of magnets in regard of eyepieces that have been removed from the tube.

- Do not place the eyepiece near instruments which may be magnetizable.
- Do not place the eyepiece on sensible devices such as infusion pumps, pacemakers, measuring devices or magnetic data media such as floppy disks, audio and video tapes or credit cards.
- Always store the eyepiece in its original packaging, when not using it.

CAUTION

Damage to eyes due to high light radiation!

If you look through the eyepiece or the tube into a light source, damage to eyes may occur.

- Never look through the eyepiece or the tube into a light source or directly into the sun.

1 Eyecup
for adjusting the distance between the eyepiece and the eye.

2 Diopter setting ring

adjustable from -8 D to +5 D

3 Diopter scale
for reading off the prescription set

Fig. 12: Controls for the widefield eyepieces

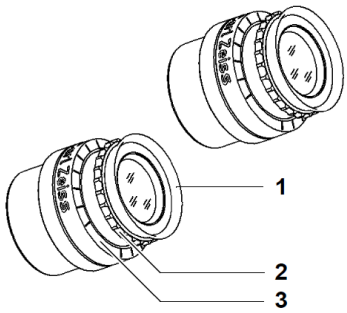

Controls for the XY coupling (optional)

1 XY reset button
The XY coupling allows motorized fine position of the OPMI in a horizontal plane. The range of travel is 60 mm x 60 mm.
The XY coupling is provided with a recentering mechanism. Use the reset button (1) to move the XY coupling to the center position.

Status of the reset button:

→ Reset button is lit: The joystick on the foot control panel has been activated. You could control the XY coupling to perform a movement.

→ Reset button flashing: The reset button is activated and the XY coupling is moving to the center position.

Use the joystick on the foot control panel to move the XY coupling.

→ The reset button cannot be activated and has no function while the joystick is in use.

→ If you started the recentering movement via the reset button, you can stop this movement at any time using the joystick.

Fig. 13: Controls for the XY coupling

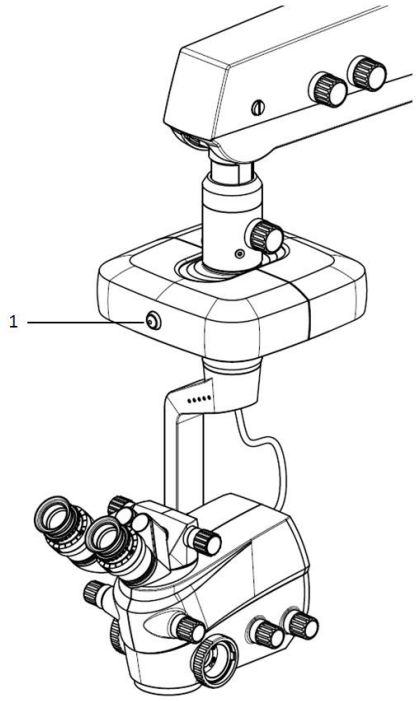

Components of the suspension system

The suspension system is used to mount, position and control the microscope. It comprises the following components:

1 Suspension arm
The OPMI is in the standby position when the suspension arm is moved upward. In the standby position, the light turns off and the OPMI is reset to the start values, e.g. XY reset.

2 Carrier arm
with a power switch, 50% mode switch, the connectors for power cord and foot control panel, and HDMI (optional).

3 Floor stand column
The floor stand column supports the carrier arm.

4 Floor stand base
with four casters for moving the entire system. S200-Retina base adds additional weights on S200-Cataract base.

Fig. 14: Components on the suspension system

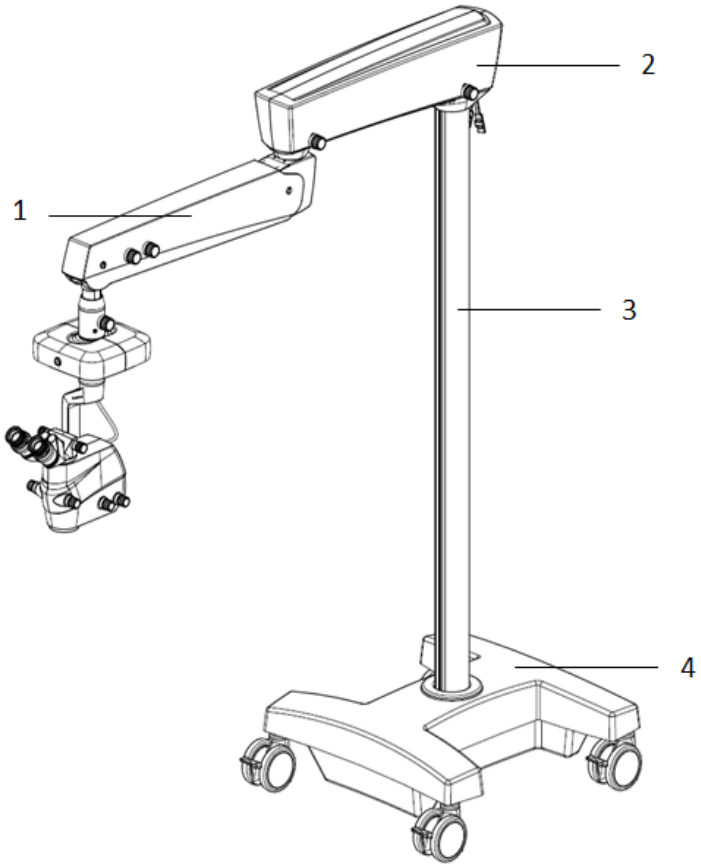

Controls on the suspension arm, carrier arm, and stand base

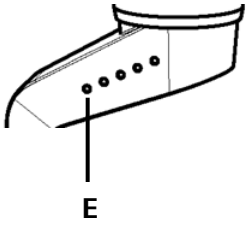

1 Friction
Use this screw to adjust the friction of the swivel movement of the carrier arm.

2 50% mode switch
When actuated, this switch sets the LED light source to a fixed value (50% of maximum illumination). 50% mode is active when the 50% mode switch emits amber light and the indicator LED (E) flashes.

The following functions are deactivated in 50% mode:

- Light on/off
- Light brighter/darker
- Motorized focus, motorized MC, motorized zoom

Upon returning to normal operation the device automatically sets the lowest illumination level (<25%) for the LED light source. Normal mode is active when the indicator LED (E) emits steady light and the 50% mode switch no longer emits amber light.

3 Friction
Use this screw to adjust the friction of the swivel movement of the suspension arm.

4 Balance setting screw

Screw for setting the spring force for balancing. After mounting the surgical microscope including all accessories, adjust the balance setting of the suspension arm using this screw.

5 Friction adjustment screw for limiting downward movement
You can limit the downward movement of the suspension arm by adjusting a stop.

6 Friction adjustment screw for upward/downward motion
After balancing the microscope equipment, you can use this screw to adjust the friction of the suspension arm's upward/downward movement.

7 Locking tab, 4x
At least three locking tabs must be pressed down to secure the stand in position.

- Press down to lock the caster,
- Press up to release the caster.

8 Remote control receiver (optional)
It's the optional video remote control receiver.

Fig. 15: Controls on the suspension arm, carrier arm, and stand base

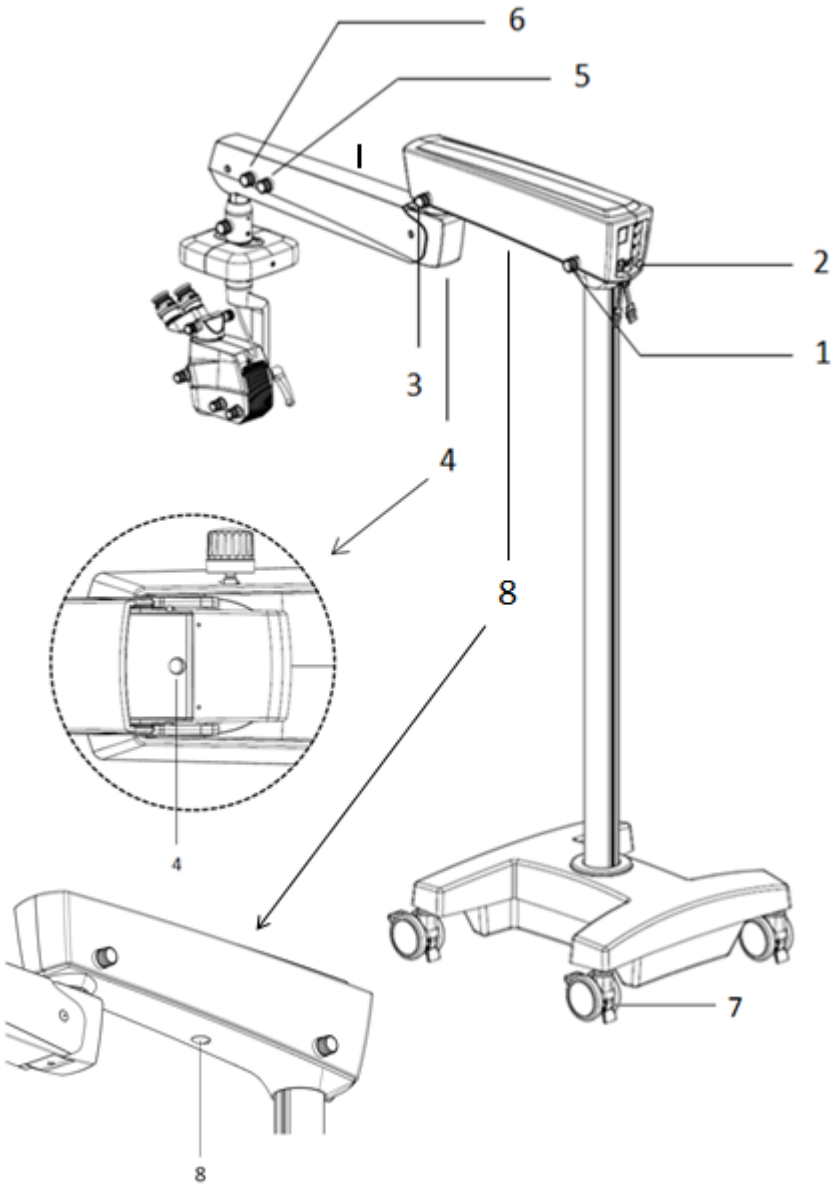

Controls and connector panel on the back of carrier arm

1 Power switch
For switching the system on and off. When the system has been switched on, the green lamp in the switch is lit.
The power switch also contains an automatic circuit breaker. In the event of a short inside the system, the circuit breaker is activated and swtiches off the system.

2 Connector for foot control panel with 12 functions

3 Power inlet socket

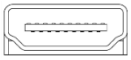

4 HDMI socket (optional)

5 Strain relief device (2x)
The strain relief device prevents inadvertent unplugging of the power cable.

6 50% mode switch

Fig. 16: Controls and connector panel on the back of carrier arm

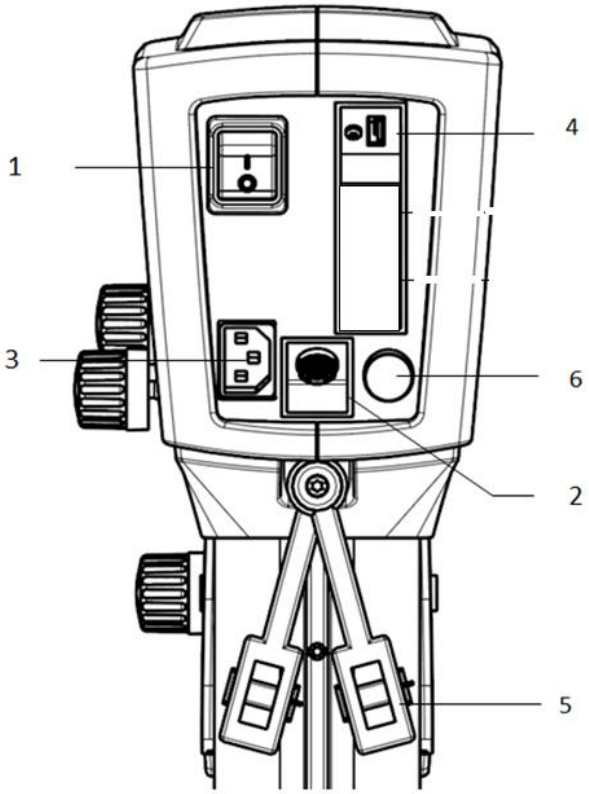

Components and controls of the foot control panel

The foot control panels allow control of various functions of the microscope. The assignment of the functions to the button on the foot control panel is shown on the following pages.

You can only activate functions that are implemented in the respective device configuration. Only use the foot control panels listed here and in the ordering data:

– Foot control panel with 12 functions, cable-based (FCP), with 3 m cable

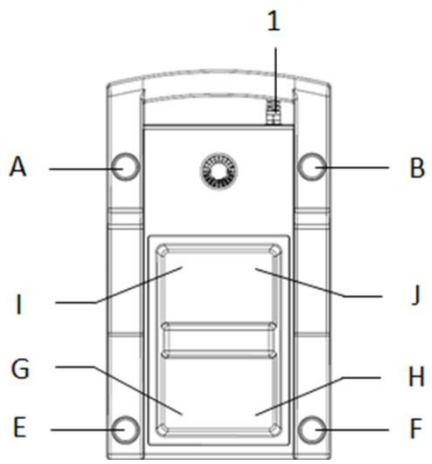

Design

1 Connector
for the cable connecting the foot control panel with the connector panel of the suspension system

2 Bracket
for storing the foot control panel.

3 Controls
– Buttons A, B, E, F
– Joystick
The joystick located between buttons A and B is used for motorized fine adjustment of the X-Y coupling.
– Rocker switches G, H, I, J
The rocker switches are used to operate the "Zoom" and "Focus" functions.

Preconfigured button assignment

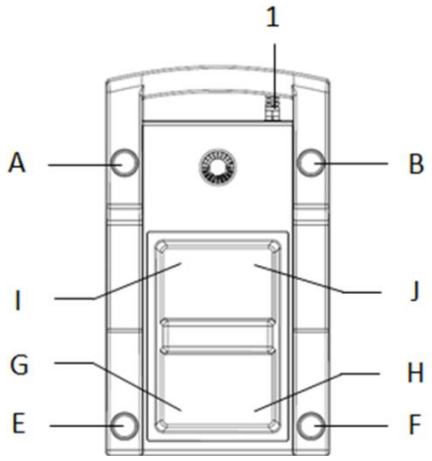

Buttons

The functions of buttons A, B, E and F are preconfigured, and the factory settings are:

- Button A: light intensity ▼
- Button B: light intensity ▲
- Button E: light source on/off
- Button F: no function

The joystick located between buttons A and B is used to control the XY coupling.

Rocker switches

The default settings (focus/zoom) of the rocker switches are preconfigured. However, a ZEISS service technician can change the settings under installation.

The horizontal settings are:

- Button I: focus ▲
- Button G: zoom ▲
- Button J: focus ▼
- Button H: zoom ▼

The vertical settings (factory setting) are:

- Button I: zoom ▼
- Button G: zoom ▲
- Button J: focus ▼
- Button H: focus ▲

Accessories for coobservation and documentation

You can attach various accessories for coobservation and/or documentation purposes to the system.

1 45° inclined tube, f = 170

2 Integrated HD-camera module (camera head)

Note that it can only be installed by ZEISS service.

3 3x magnification changer

4 Adapter cover

5 Assistant microscope

6 180° tiltable tube, f = 170

Fig. 17: Accessories Connection

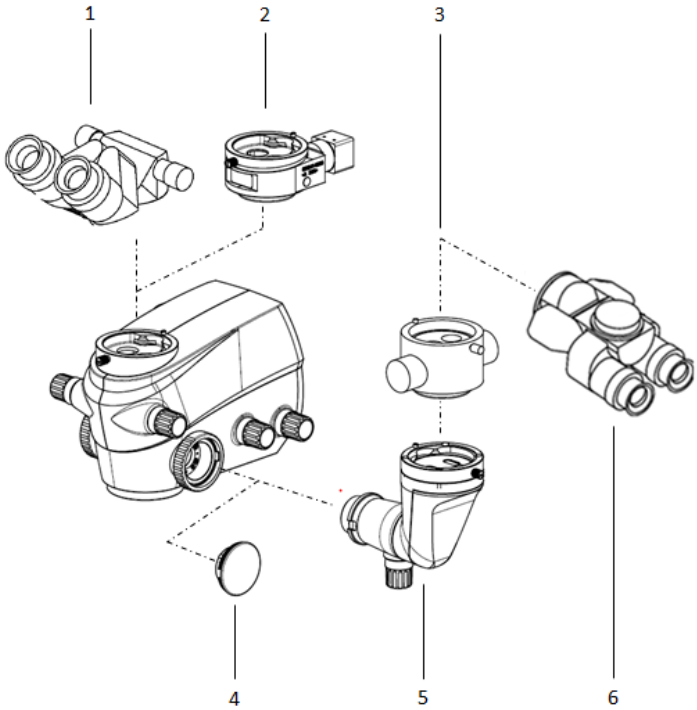

Preparations for use

CONFIGURING THE SURGICAL MICROSCOPE **64**
Mounting tubes, eyepieces and objective lens *64*
Mounting accessories *67*
Balancing the system *69*

CONNECTING THE SYSTEM AND ACCESSORIES **71**
Connecting the suspension system to line power *72*
Connecting the foot control panel to the suspension system *73*
Connecting the strain relief device *74*
Connecting video devices (optional) *75*

SETTING UP THE SYSTEM **76**
Relocating the system *76*
Adjusting the limit of downward travel *77*
Positioning the system in the OR *79*
Tilt adjustment *80*
Adjusting the surgical microscope *81*

PREPARING THE SYSTEM FOR STERILE USE **84**
Asepsis sets *84*
Drapes *85*

Configuring the surgical microscope

Mounting tubes, eyepieces and objective lens

If a different tube, eyepiece or objective lens is needed for an application, you can change these components as required.

WARNING

Risk of injury caused by lowering of the surgical microscope!

- Never mount or remove accessory equipment on the surgical microscope during surgery.
- Make sure that the maximum permissible load on the suspension arm is never exceeded.
- Rebalance the suspension arm after every change of equipment.

WARNING

Risk of injury caused by parts falling down!

- Before every use and after re-equipping the system, make sure that binocular tube (5) is securely locked in position. Make sure that securing screw (4) and objective lens (3) or the objective lens carrier ring with accessories have been firmly tightened!

Changing tubes, widefield eyepieces and objective lens.

- Bring the suspension arm in a position convenient for you and tighten friction adjustment knob (1).
- Loosen securing screw (4) by a few turns.
- Remove cover (2) and store it in a safe place.
- Place binocular tube (5) on the microscope body and firmly tighten securing screw (4).
- You can install further accessories between the binocular tube and the microscope body. Lock these units in position in the same way using securing screw (4).
- Remove the widefield eyepieces from their mount on the binocular tube. You have to apply some force, as the eyepieces are magnetically held in position.

- Insert widefield eyepieces (7) as far as they will go into the mounts (6) intended for them. The magnetic coupling reliably secures them in position.
- Unscrew objective lens (3) from the microscope body by turning it counterclockwise.
- Turn the new objective lens into the threaded mount on the microscope body as far as it will go.
- Loosen friction adjustment knob for upward/downward movement (1) again and perform the balancing procedure.

Fig. 18: Mounting tubes, eye-pieces, objective lens

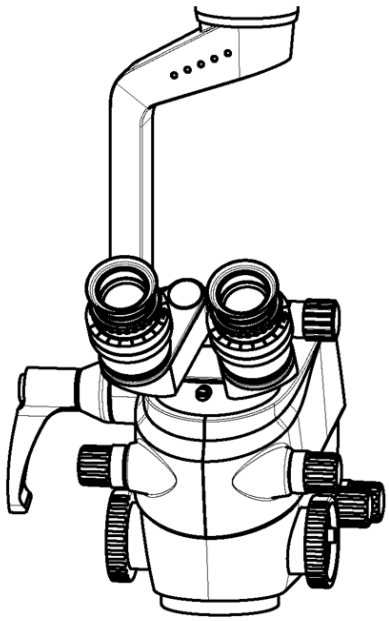

Mounting accessories

You can attach various accessories for coobservation or video documentation purposes to the system.

CAUTION

Risk of injury!

The swivel arm may move downward when accessories are changed.

- Make sure that the maximum permissible load on the suspension arm is not exceeded.
- Re-adjust the balance of the suspension arm after every change of equipment.
- Adjust the limit of downward travel of the suspension arm in such a way that the surgical microscope cannot come into contact with the patient. This applies in particular during the installation of accessories underneath the microscope.

CAUTION

Risk of injury!

Incorrectly mounted accessories can fall down.

- Do not replace accessories over the patient.
- After each use and after each modification of the device, check for the firm seat of the accessory. Make sure that securing screw (3) and objective lens (2) have been firmly tightened!
- Mount accessories only in accordance with the appropriate Instruction for Use.

- Turn off the unit at the power switch before changing any accessories.

Mounting assistant module (optional)

- Bring the suspension arm in a position convenient for you and tighten friction adjustment knob.
- Loosen the securing screw (7) as per instruction by a few turns.
- Remove cover (4) and store it in a safe place.
- Put assistant microscope (5) onto the assistant interface (8) and firmly tighten the securing screw (7).
- Put optional 3x magnification changer (3) onto assistant microscope (5).
- Put tube (6) onto assistant microscope (5) or optional 3x magnification changer (3).
- Loosen friction adjustment knob for upward/downward movement again and perform the balancing procedure.

There is one assistant interface on either side of OPMI for mounting assistant module. But because of the maximum load limitation, only ONE assistant module could be mounted onto OPMI! Do NOT mount two assistant modules onto OPMI at the same time.

Mounting the RESIGHT 500 – manual fundus viewing system (optional)

- Please contact ZEISS service staff.

After changing the accessories, you must perform a weight balancing procedure.

Fig. 19: Mounting accessories

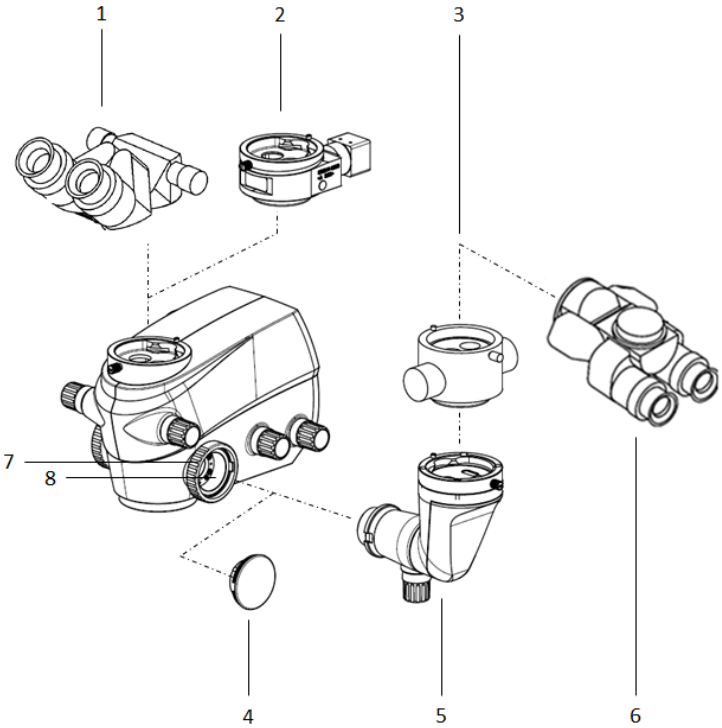

Balancing the system

– Balance the system only after the surgical microscope and all accessories have been installed!

– With the surgical microscope with XY coupling (without tube, eyepieces, objective lens) mounted, the suspension arm may be exposed to a max. additional load by accessories.

NOTE

Performance of balance setting

- Perform a balancing before using the device (not above the patient and with a secure distance to other persons and devices) so that the surgical microscope remains in its position within the working area.

CAUTION

Risk of crushing - mind your fingers!

Fingers may be crushed in the areas marked with the "risk of crushing" label.

- Do not touch these areas while the system is being moved or brought in its working / transport position.

- Loosen friction adjustment knob for upward/downward movement of the suspension arm.
- Insert a 10 mm hex key into opening of joint cover.
- Use the hex key to turn balance setting screw until balance has been achieved.
- Check the balance setting in several positions.
- Use adjustment screw to set the required friction of the upward/downward movement of the suspension arm.

Fig. 20: Balancing the system

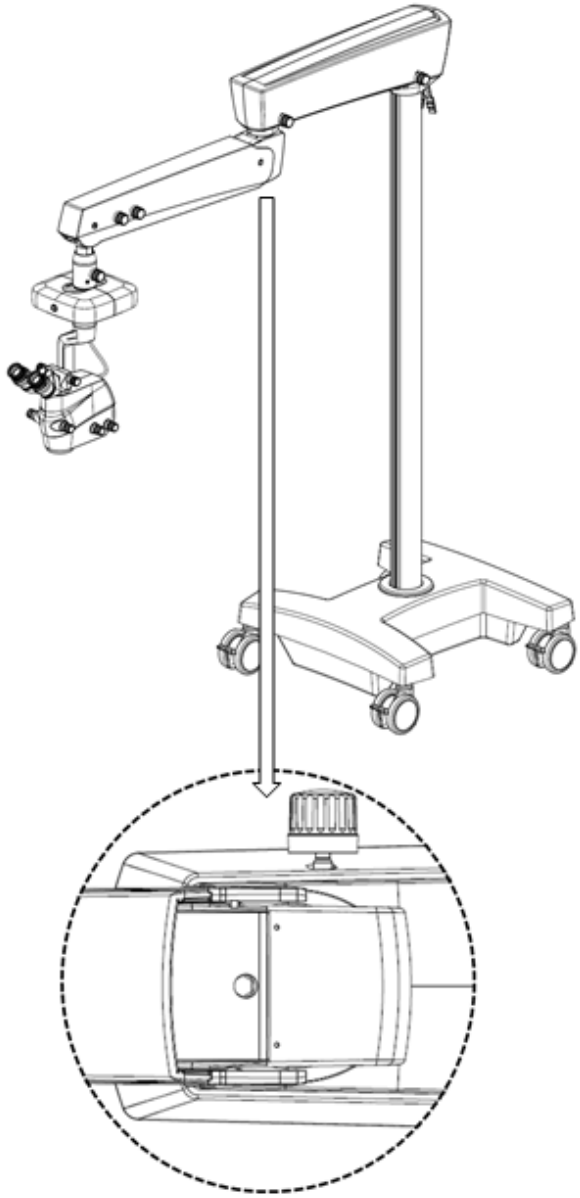

Connecting the system and accessories

CAUTION

Risk of patient injury caused by electrical voltage!

- Do not touch the power outlet socket or other signal interfaces while in contact with the patient.

CAUTION

Risk of electric shock caused by inadmissible or defective accessories!

Inadmissible or defective accessories may lead to increased leakage current!

- Never touch any power outlets or video ports during patient contact.
- When setting up your system, make sure to comply with the requirements of IEC 60601-1:2005, chapter 16; in some countries IEC 60601-1- 1:2000 may still be valid.
- Also comply with the Medical Device Operator Ordinance or other national codes.

NOTE

Tripping hazard!

Cables inappropriately routed on the floor may constitute a tripping hazard.

- Always route cables in a manner that will not obstruct the workflow.

Connecting the suspension system to line power

- Make sure that power switch (1) is OFF.
- Check whether the device's rated voltage matches with the network's rated voltage at the installation site.
- Insert the supplied power cord into the power inlet socket (3) on the floor stand.
- Only connect the power cord to wall outlets which are equipped with a properly connected protective earth conductor.

Fig. 21: Connecting the suspension system to line power

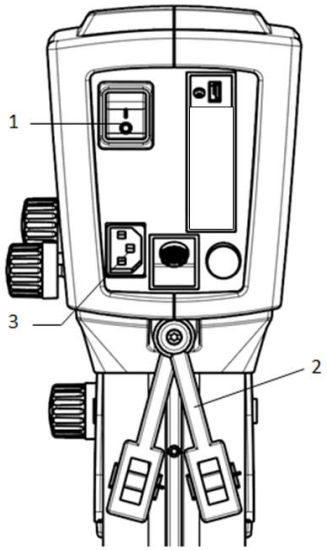

Connecting the foot control panel to the suspension system

- Turn off the system at the power switch (1).

  → When switched off, the power switch is not illuminated.
- Connect the cable of the foot control panel to the connector (2) on the back of the carrier arm.
- Secure the foot control panel using the strain relief device (3).

Fig. 22: Connecting the foot control panel to the suspension system

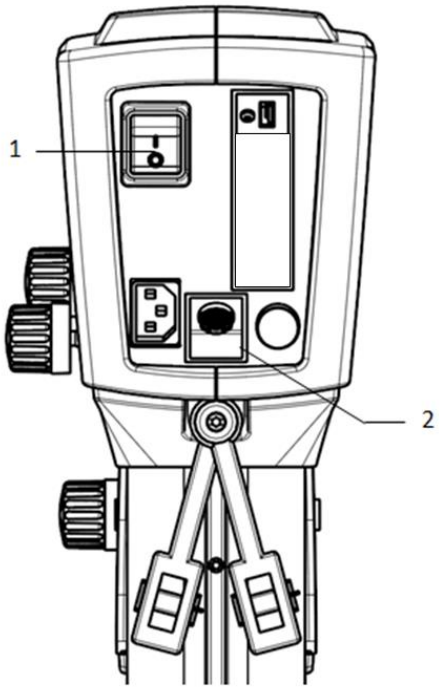

Connecting the strain relief device

Use the strain relief device to prevent the connected cables from being pulled out inadvertently.

- Form the cable into a loop (2).
- Open flap (3).
- Feed the cable through the opening (4).
- Close the flap (5).
- Tighten the cable until it encloses the flap (6).

Fig. 23: Connecting the strain relief device

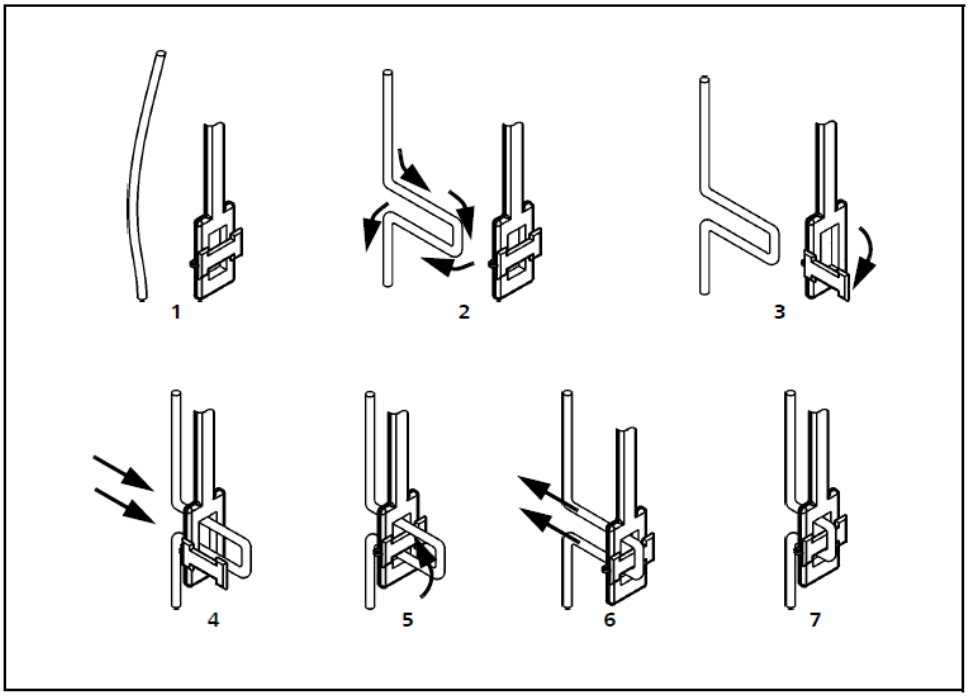

Connecting video devices (optional)

CAUTION

Risk of electric shock caused by inadmissible or defective accessories!
Inadmissible or defective accessories may lead to increased leakage current!

- Never touch any power outlets or video ports during patient contact.
- When configuring your system, please make sure to comply with the requirements of EN 60601-1:2006, chapter 16.

- Please contact ZEISS service staff.

After changing the accessories, you must perform a weight balancing procedure.

Fig. 24: Connecting video devices

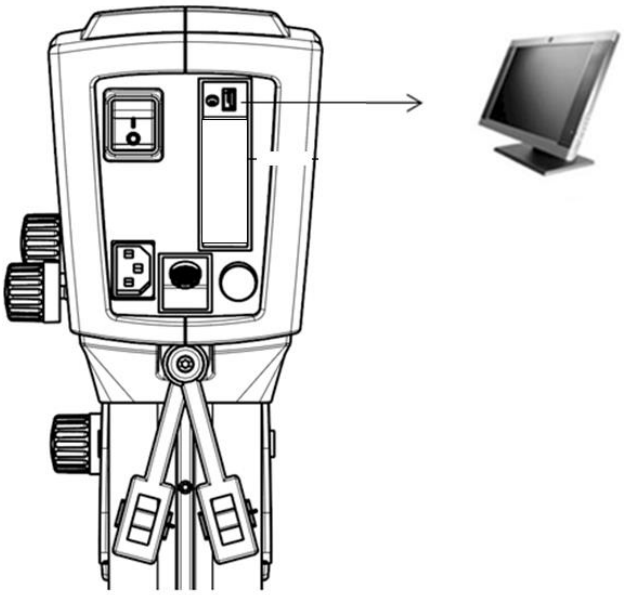

Setting up the system

Relocating the system

CAUTION

Risk of crushing - mind your fingers!
Fingers may be crushed in the areas marked with the "risk of crushing" label.

- Do not touch these areas while the system is being moved or brought in its working / transport position.

CAUTION

Risk of toppling during transportation of the system!
If the following precautions are not observed, the floor stand may topple over and injure persons!

- Move the floor stand into its transport position.
- To safely move the system, slide the device according to the transportation label on the column (see illustration on the left) and lock the brakes on the carrier arm and suspension arm during transportation, always hold the stand column at the position marked with a label.
- Mind the maximum passage height when passing through doorways.
- Avoid collisions of any kind.
- To cross over steps and edges, two persons are needed to jointly hold and lift the device!
- Be extremely careful when moving over slopes.
- Do not park the stand on slopes.

Please observe the following points when relocating the stand:

- Turn off the device at the power switch.
- Remove the power plug from the power socket.
- Move the suspension arm into its transport position (see illustration on the left).
- Wind up the cable of the foot control panel.
- Wind up the power cord.
- Unlock all arrestors of the casters.
- To move the system, always hold the stand column at the position marked with a label.

- Ensure the device is standing on even ground.
- Press at least three of the arrestors and make sure that the suspension system is no longer able to roll away by itself.

As the stand is very easy to maneuver, there is a tendency to underestimate its weight. Therefore, move the stand slowly and carefully!

CAUTION

Damaging of the suspension system!
It is possible that the suspension system is damaged due to a collision with other devices, parts may drop down and cause personal injuries.

- Check the device for damage before each operation.
- Move the suspension system carefully and avoid collisions.
  If the suspension system nevertheless collides with other devices, you must have it checked by ZEISS Service.

NOTE

Transport over long distances!
Over long distances (e.g. removal, return for repair, etc.) the device must always be transported in the original packaging or in special return packaging.

- For details, please contact your dealer or the ZEISS Service.

Adjusting the limit of downward travel

CAUTION

Risk of injury caused by lowering of the OPMI!

- Always limit the downward travel of the suspension arm to prevent any contact with the patient in case the surgical microscope is lowered accidentally.

- Loosen screw (1) for the upward/downward movement.
- Lower the surgical microscope until it can be focused on the surgical field (depending on the focal length of the objective lens), while at the same time allowing for a sufficient safety distance from the surgical field.
- Firmly retighten screw (1) for the upward/downward movement.
- Lower the surgical microscope again to the lowest limit stop and check the safety distance.

– The limit of downward travel is only effective in the lower part of the suspension arm's vertical movement range (starting from the arm's horizontal position).

– If you wish to use the suspension arm's full range of vertical movement, lower the suspension arm as far as it will go and then firmly retighten screw (2).

Fig. 25: Adjusting the limit of downward travel

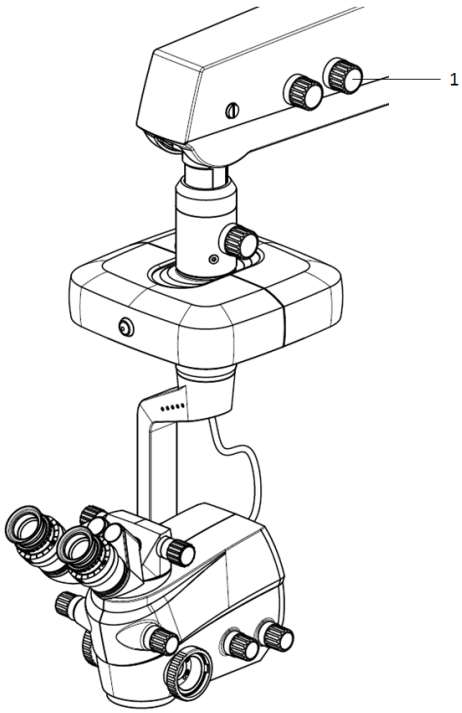

Positioning the system in the OR

Proceed as follows to position the system:

- Turn off the device at the power switch. Remove the power plug from the wall socket.
- Fold the suspension arm to its moving position (see illustration on the below).
- Wind up the foot control cable and power cord.
- Unlock all locking tabs of the casters.
- Hold the system by the marked position on the stand column and carefully move it.
  - Make sure that the system is positioned on level ground.
  - As the stand is very easy to maneuver, there is a tendency to underestimate its weight. Therefore, move the stand slowly and carefully!
- Press at least three of the locking tabs of casters and make sure that the stand is no longer able to roll away by itself.

Fig. 26: Position the system in the OR

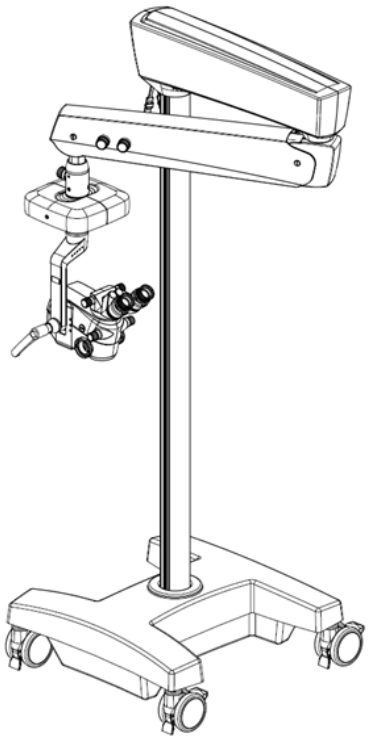

Tilt adjustment

- Tilt the microscope to the position required. The optical axis of the microscope should generally be positioned at right angles to the patient's eye

NOTE

- Before starting any surgical procedure, always fix the grip again.

Fig. 27: Tilt adjustment motion

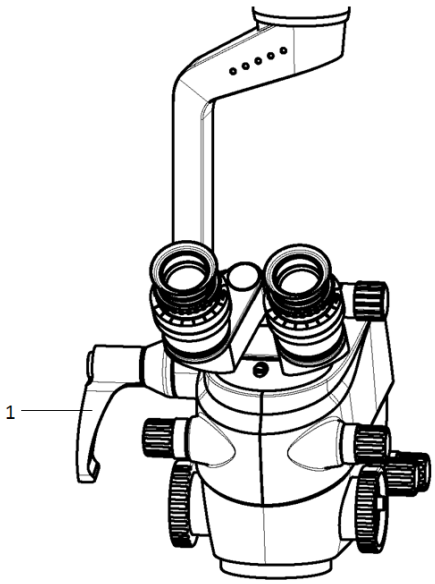

Adjusting the surgical microscope

CAUTION

Damage to the eye caused by high light intensity!

- Never use the sun as a distant target for the adjustment of the surgical microscope described below.
- Do not use any other extremely bright light sources as a target.

Notes on adjustment

- To permit fast setup of the microscope, it is advisable to store the pupillary distances and prescriptions of the different users so that they can be easily preset during system preparation.
- Do not wear any bifocal or progressive lenses for the adjustment procedure and subsequent work with the microscope.
  Such lenses make correct diopter setting impossible and result in unsatisfactory imaging.
- Optimum image clarity in the eyepieces and optical port for documentation equipment (camera, video) can only be achieved through careful focusing and a precisely adjusted binocular tube.

Adjusting the binocular tube

Adjusting the interpupillary distance

- Move the microscope to a vertical position above a flat object, e.g. a sheet of paper with writing.
- Use knob (1) to adjust the distance of the eyepieces (2) on the binocular tube in such a way that the two eyepiece images merge into one.

Adjusting the eyepieces

The following procedure must be performed separately for each eyepiece in the order described.

- Set the microscope to minimum magnification.
- Set the diopter adjustment ring (5) at the eyepiece to zero position.
- Look through the eyepiece and move the microscope to focus the image.
- Set the microscope to maximum magnification and adjust the fine focusing system until the image is sharply defined.
- Then reset the microscope to minimum magnification without changing the working distance.
- Set the diopter setting ring (5) to the maximum plus value (e.g. +5 D).
- Look through the eyepiece and turn the diopter setting ring slowly towards the minus values until the image is sharply defined.
- Repeat the entire procedure for the second eyepiece.

→ The microscope has now been set in such a way that the image is sharply defined over the complete magnification range without any renewed focusing during the magnification setting.

If this is not the case, repeat the procedure.

Adjusting the eyecups

- Adjust the eyecups of the eyepieces in such a way that the entire field of view can be seen.
  - Viewing with eyeglasses: screw in the eyecups (4) all the way.
  - Viewing without eyeglasses: screw out the eyecups (4) and adjust for your field of view.

Adjusting the working distance and magnification

- Position the microscope above the surgical field so as to ensure convenient work.
- Roughly focus on the object by moving the OPMI.
- Set the microscope to maximum magnification and adjust the fine focusing system until the image is sharply defined.
- Set the microscope to the required magnification. The focal plane is retained.

CAUTION

Risk of injury to the patient caused by parts falling down!

Due to collisions or incorrect installation, parts may fall down and injure the patient.

- Check the correct and secure installation of all parts before using the device. Make sure the securing screw (3) is firmly tightened.
- Check that the floor stand is secured in a steady position and can be pivoted without causing collisions.

Fig. 28: Adjusting the surgical microscope

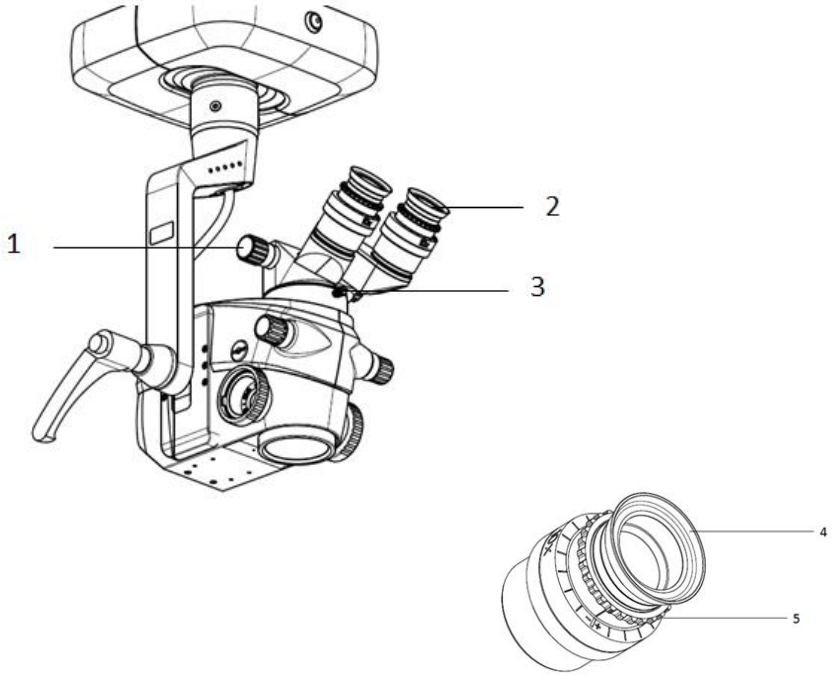

Preparing the system for sterile use

CAUTION

Risk of infection caused by contaminated asepsis accessories and drapes!

- Only use sterile asepsis accessories and drapes suitable for the system!
- The products contained in the asepsis sets must be cleaned, disinfected and sterilized before each use. This also applies to the first use after delivery.
- Make sure that the operating staff is briefed about the sterile operation of the system.
- Before each use of the surgical microscope, check whether the asepsis caps are firmly attached to the surgical microscope.

Asepsis sets

For sterile use, the system can be equipped with resterilizable products. The asepsis sets available from ZEISS contain caps and hand grips which can be sterilized in autoclaves. For detailed information on sterilization please see the enclosed instructions "Preparation of resterilizable products" for the respective asepsis sets.

NOTE

Risk of infection

- When using accessories observe the corresponding Instructions for Use.

The following asepsis caps (see) may be used:

1 Asepsis caps for the PD adjustment knob

2 Asepsis caps for hand grip (not show in the illumination)

3 Asepsis caps for controls

Fig. 29: Attaching asepsis caps

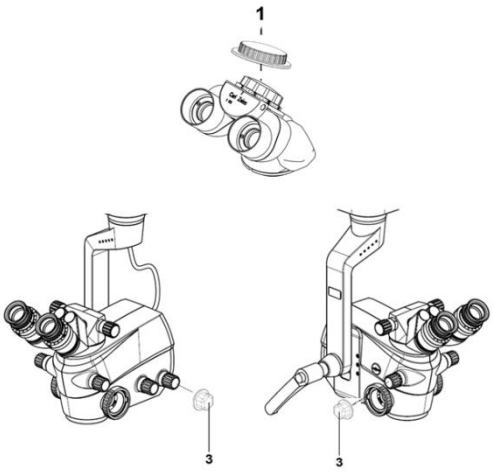

Drapes

CAUTION

Risk of infection caused by contamination!

- Only use the device with suitable, sterile accessories.

You can also use disposable sterile drapes to cover the system. When draping the system, make sure there is enough slack in the drapes to allow for movement of the microscope carrier and surgical microscope.

NOTE

Reduced image quality!

Drapes with drape lens (VisionGuard®) may reduce the image quality of the optics.

- Remove the protective film from the drape lens (VisionGuard®) If necessary, replace the soiled drape lens..

When draping the system, make sure there is enough slack in the drapes to allow for movement of the microscope carrier and surgical microscope. It is especially important that the drapes are completely loose around the handgrips. The surgeon must be able to reliably operate the controls through the drape.

Operation

POWERING THE SYSTEM UP AND DOWN..... 88

FUNCTION TEST BEFORE USE..... 90

TYPICAL PROCEDURE 93

Powering the system up and down

Prerequisites

✓ The power cord is connected to the back of the carrier arm.

✓ The foot control panel is connected to the back of the carrier arm.

Proceed as follows to power the system up and down:

- Do not switch on the device when it is above the patient.
- Press the power switch (1) on the back of the carrier arm.

  → The device has been switched on.

Before starting work with the device, you have to perform a function test. This lets you check the device configuration and reconfigure it, if necessary.

Fig. 30: Switching a device

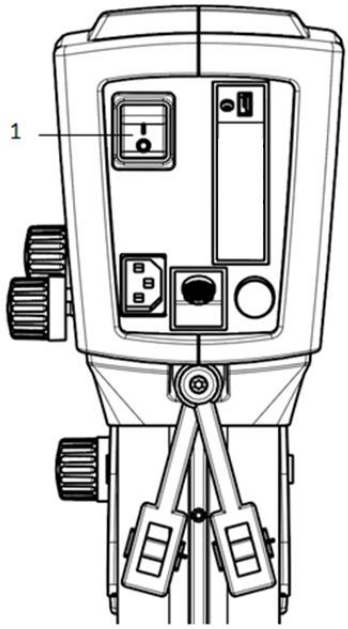

Function test before use

CAUTION

Failure of functions!
If the failure of a function impairs your work, do not use the system for safety reasons!

- If possible, correct the malfunction (see "What to do in the event of malfunctions") or contact ZEISS Service.

Before every use, make sure that all components and accessories are securely locked in position. Observe the maximum load capacity.

Always check the function of the system before surgery (without patient) using the following checklist:

✓ Check that all cables have been connected.

✓ Check that the microscope protective cover has been removed.

✓ Check that there is enough clearance from the accessories installed.

- Turn on the system at the power switch of the suspension system.
- Check the focus
  - ✓ Press the appropriate button on the foot control panel.
- Check the retina protection filter and the red reflex for proper function.
- Check the magnification changer for proper functioning.
- Check the zoom, if available
  - ✓ Press the appropriate button on the foot control panel.
- Check focus and XY coupling, if available
  - ✓ The buttons on the foot control panel work properly.
- Check unobstructed movement and function of the system
  - ✓ Ease of movement has been adjusted correctly using the friction adjustment screws on the suspension system.
  - ✓ Manual focusing and positioning of the surgical microscope via the suspension arm are possible.
  - ✓ All cables and accessory parts have been fitted to ensure that the surgical microscope can be moved to a stable position without causing damage.

- ✓ The device has been positioned in such a way that it can be moved away from the patient at any time.

- Friction adjustment of the surgical microscope
  - ✓ Check that the friction of the surgical microscope's rotation has been adjusted as required using the friction adjustment knob on the suspension system.
- Check the eyepieces / binocular tube / objective lens
  - ✓ The surgical microscope is in a position convenient for you.
  - ✓ The pupillary distance has been correctly set.
  - ✓ The eyecups have been adjusted in such a way that the full field of view is visible.
  - ✓ Check that the correct prescription has been set on the diopter scale.
  - ✓ Image quality is correct throughout the entire magnification range.
  - ✓ Objective lens and eyepieces are clean.
- Check the accessories
  - ✓ The correct function of other equipment approved by ZEISS (video system, assistant system, etc.) has been checked using the relevant Instructions for Use.
- Checking the LED brightness: The light intensity of defective light sources may vary and damage the retina of the patient's eye.
  - ✓ Check the LED light source and its system state prior to each application, using the LED indicator on the Yoke.
  - ✓ The brightness of the LED light source can be controlled via the foot control panel. Brightness variation has an effect on the surgical field illumination.
  - ✓ Ensure that the heat sink is free from dirt.
- Checking the downward travel limit.
  - ✓ Check that the minimum working distance (height) from the surgical field has been adjusted.
- Checking the stand for secure positioning.
  - ✓ Check that at least three of the locking tabs have been pressed and prevent the stand from starting to move by itself.

- Check correct balancing
  - ✓ When fully balanced, the surgical microscope should remain stationary in all positions within the work area and move neither upward nor downward.

CAUTION

Risk of injury caused by lowering of the surgical microscope!

- Check the weight balance of the suspension arm. When fully balanced, the surgical microscope should remain stationary in all positions within the work area and move neither upward nor downward.
- Always limit the downward travel of the suspension arm to prevent any contact with the patient in case the surgical microscope is lowered accidentally.

NOTE

Deteriorating illumination system function

With progressing service life of the light source, the actual illumination intensity decreases (this is a normal property of the system).

- Whenever using the LED, ensure beforehand that the light intensity available is sufficient.
- Please contact ZEISS service to change the LED if necessary.

Typical procedure

CAUTION

Risk of burns caused by light!
Changing the magnification on the folding tube also changes the light intensity.
Light can cause burn injuries.

- After adjusting the magnification always check the light intensity and the illuminated-field diameter.
- Reduce the light intensity to the absolute minimum required.

CAUTION

Risk of injury!
If brightness from the light source is too high, it can damage the patient's retina.

- Adjust the illumination intensity and the resulting radiation exposure time by selecting the appropriate illumination setting. You will find the values recommended by ZEISS in the table "Maximum radiation exposure times" on page 24. Any deviation from these values is only permissible when medically justified.
- When operating on the eye, use the retina protection filter (blue barrier filter). It protects the patient's retina against unnecessary (blue) radiation and permits the radiation exposure time to be increased.

✓ The operating staff must be briefed on the use of the system.

- Switch on the power switch of the suspension system.

CAUTION

Risk of injury!
Long radiation exposure times while the device is unattended may lead to retinal injury of the patient's eye.

- Never leave the device unattended with the light source switched on.

- Check the system using the checklist of function test before use.
- Swing the surgical microscope over the surgical field into an ergonomic position within the working distance.
- Press the reset button on the X-Y coupling, if applicable
  → The X-Y coupling moves to its center position.
  → The focus adopts its initial position in the focusing range.
- Select the lowest magnification (zoom function on the foot control panel).

NOTE

Damage to the eye

In case of inadvertent operation of the foot control buttons the brightness of the light source can increase and cause damage to the patient's eye.

- Ensure before surgery that the foot control panel is positioned in such a way that the button cannot be operated inadvertently.

NOTE

Reduced image quality!

Drapes with a drape lens (VisionGuard®) may impair the image quality of the optical system.

- Remove the protective film from the drape lens. If necessary, replace the soiled drape lens.
- Attach the drape with the drape lens to the surgical microscope as described in the instructions provided with the drape.

CAUTION

Risk of collision!

When the recentering key is pressed, during rough focusing via the suspension arm or when the focus is moved unintentionally, the patient may be injured or mounted accessories may be damaged.

- Ensure to provide sufficient clearance between equipment and patient (min. 40 mm) when pressing the recentering key.
- Ensure that any accessories installed do not come into contact with other objects.

- Look through the eyepieces and lower the surgical microscope using the suspension arm until the surgical field comes into focus. This is to achieve rough focusing.
- Select the highest magnification (zoom function on the foot control panel).
- Look through the eyepieces and activate the focus function on the foot control panel until the image of the surgical field is in focus.
- Select the magnification required (zoom). Look through the eyepieces of the binocular tube. Adjust the eyepieces so that both the edge of the field of view and the microscope image are in focus.

LED light source

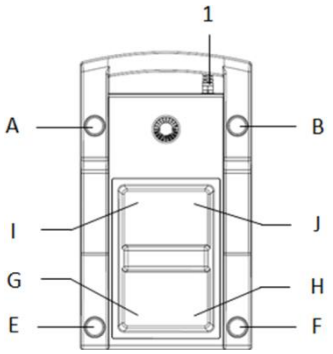

- Switch on the LED light source by pressing button E.

  → When switched on for the first time, the device sets the brightness to the lowest value. Whenever it is switched on again, the device sets the brightness to the previously set value.

- Slowly increase the brightness by pressing button B.
  Please observe the maximum permissible exposure time. Slowly reduce the brightness by pressing button A.

CAUTION

Function test in 50% mode

- Before using the device, activate the 50% mode of the LED light source and check it for proper functioning. Then deactivate 50% mode for normal operation.
- When using 50% mode, please observe the maximum radiation exposure times.

- Switch off the device if not in use, or move it into the standby position.

What to do in the event of malfunctions

FAILURE OF MAJOR FUNCTIONS 98
Failure of the XY coupling 98
Failure of the zoom or motorized MC function 99
Failure of the focusing function 100
Failure of the illumination function 101

CAUSES OF MALFUNCTIONS AND REMEDIES 102

Failure of major functions

Failure of the XY coupling

Failure of the XY coupling

Motorized control of the XY coupling is not possible.

- Position the OPMI by moving it manually in X and Y directions.

Malfunction of the XY coupling

The XY coupling performs uncontrollable movements.

- Switch off system on power switch, contact ZEISS Service.

Failure of the zoom or motorized MC function

Failure of the zoom function

In the event that the zoom function can no longer be controlled via the foot control panel, adjust the zoom factor manually at the microscope.

- you can use the knob (1) for zoom manual adjustment on the microscope to manually set the required magnification (use e.g. a coin).

Malfunction of the zoom function

The zoom function performs uncontrollable setting.

- Switch off system on power switch, contact ZEISS Service.

Failure of the motorized MC function

In the event that the motorized MC function can no longer be controlled via the foot control panel, adjust the MC knob manually at the microscope.

- you can use the knob (2) for manual MC adjustment on the microscope to manually set the required magnification.

Fig. 31: Manual adjusting ZOOM or Motorized MC

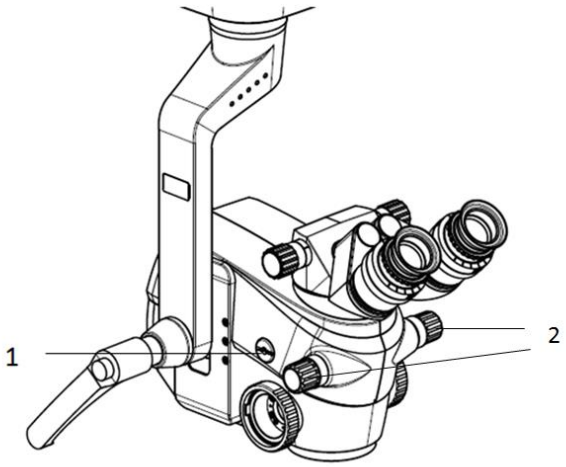

Failure of the focusing function

Failure of the focusing function

In the event that the focusing function can no longer be controlled via the foot control panel, you can focus manually by repositioning the OPMI using the suspension arm.

CAUTION

Risk of injury!

During manual focusing of the operation field via the suspension arm, the patient may be injured or mounted accessories may be damaged.

- Make sure that there is sufficient space (at least 40 mm) between the system and patient before lowering the suspension arm.
- Ensure that any accessories installed do not come into contact with other objects.

- Loosen adjustment screw for upward/downward movement of the suspension arm.
- Manually move suspension arm up and down for focusing.

Fig. 32: Manual focusing

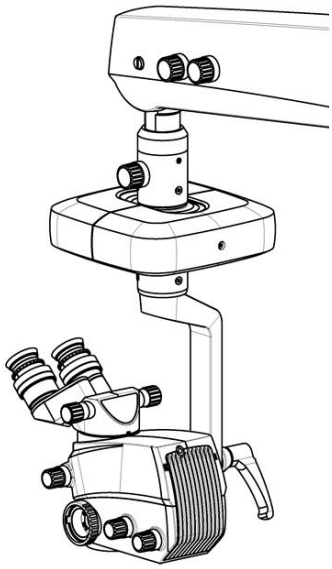

Failure of the illumination function

Failure of the illumination function

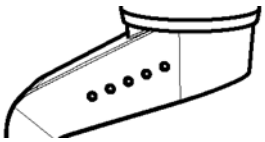

The surgical microscope is equipped with an LED light source.

1 LED indicator
If there is a malfunction of the LED light source, all of the five LEDs of the brightness indicator will flash.

- Label the device as being out of function and contact ZEISS Service.

NOTE

Measure to be taken in the event of system failure

- We recommend you to take adequate precautions, depending on the application, to enable the surgical procedure or treatment to be finished without using this microscope, if required.

Causes of malfunctions and remedies

For your safety

- To ensure optimum performance and safe working order, we recommend having it checked by our service representative as part of regular scheduled maintenance. If a failure occurs which you cannot correct with the aid of the chapter "What to do in the event of malfunctions", attach a sign to the system stating it is out of order and contact the ZEISS service staff.

Problem	Possible cause	Remedy	See
No function at all	Power plug of stand not inserted.	Plug in the power cord.	page 74
	Power switch of stand not switched on.	Press power switch.	page 91
	Automatic circuit breaker in power switch of stand responds.	Press power switch again.	page 91
	Defective power cord.	Replace power cord.	-
	Power failure.	Contact in-house electrician.	-
Focusing system inoperative.	Foot control panel not or incorrectly connected.	Correctly connect the foot control panel.	page 75
	Failure of stand electronics, defective foot control panel.	Short-term: Focus the surgical microscope manually. After surgery: Switch off system on power switch, contact service.	Page 101
OPMI moves downward.	Defect in motor electronics, motor is constantly activated.	Switch off system at power switch and unplug power cord on the carrier arm.	page 91
Motion of suspension arm too stiff.	Adjustment screw over tightened.	Slightly loosen adjustment screw.	page 56

Problem	Possible cause	Remedy	See
Motion of OPMI too stiff.	Friction adjustment screw on stand over tightened.	Loosen friction adjustment screw on stand as required.	
Stand wobbles.	Floor not level. Stand base not appropriately positioned.	Slightly change the stand base position.	-
Motorized control of XY coupling is not possible.	Foot control panel not or incorrectly connected.	Correctly connect the foot control panel.	page 75
	Failure of stand electronics, broken cable in XY coupling, defective foot control panel.	Short-term: Position surgical microscope manually. After surgery: Switch off system on power switch, contact service.	page 99
Surgical field illumination on microscope not working.	Failure of floor stand electronics.	Illuminate surgical field using an OR illuminator. Contact Service.	-
LED light source goes constantly off and on again during operation.	LED light source is overheated.	Contact Service.	-
	Failure of floor stand electronics.	Illuminate surgical field using an OR illuminator. Contact Service.	-
Insufficient surgical field illumination.	Brightness level set too low.	Adjust brightness on foot control panel.	Page 61
	Lamp aging may lead to reduced light intensity.	Contact Service to replace LED light source.	-
	Screw for swinging in the retina protection filter is in an intermediate position.	Activate lever until the retina protection filter is correctly in place.	Page 47
Surgical field illumination too bright.	Brightness level set too high.	Reduce brightness using foot control panel.	Page 61
		Switch off light source using foot control panel. Illuminate surgical field using an OR illuminator. Contact Service.	
Foot control panel is inoperative.	Connections on the carrier arm not plugged in.	Plug in connections.	Page 74

Care and Maintenance

SYSTEM MAINTENANCE **106**
Maintenance intervals *106*
Technical safety check *109*

CARE OF THE DEVICE **110**
Cleaning *110*
Sterilization *111*
Disinfection *111*

ENVIRONMENTAL PROTECTION MEASURES **112**
Note on disposal *112*

System maintenance

Maintenance intervals

Regular preventive maintenance is required to ensure safe and correct operation and a long service life of the system on an ongoing basis.

The following table lists the relevant maintenance activities and shows at which maximum intervals they must be performed.

The corresponding procedures in order to perform maintenance activities on your own can be found in the following descriptions.

Any other maintenance activities that is not described here in detail requires device-specific knowledge.
Please contact your local ZEISS service or an authorized partner for performing maintenance activities in due time.

Component	Inspection features and acceptance criteria	Comments
According to country-specific interval requirements		
Safety check	According to country-specific requirements	
Before each use		
Brakes	Mechanical function testing: release brakes completely; braking force holds microscope securely in balanced state without any change of position.	
When specified operating hours have been reached		
Lamp	We recommend replacing the lamp after the specified operating hours have been reached LED light source approx. 50,000 hours. If OPMI is used 12 hours per day and 365 days per year, the lamp need to be replaced after 11 years.	

Component	Inspection features and acceptance criteria	Comments
Every 12 months		
Documentation and identification labels	Visual inspection: Manuals and identification labels available, undamaged, complete and legible	
Operating elements such as XY coupling (option)	Visual inspection and function test: – 50% mode working – Probes move easily without play	
Carrier system including microscope mount	Function test: – play-free movement of bearings, stops and suspensions – Locking screws are in place and tightened – Brakes operational at maximum permissible OPMI configuration Maximum additional load	
Stand column (floor stand only)	Function test: Secure seating without mechanical play in the column connection	
Casters (floor stand only)	Visual inspection and function test: – play-free seating, no locking during rotating and rolling, locking tabs and brakes securely positioned	
OPMI	Function test: Check of optical imaging and illumination of the field of view	
Zoom, focus and illuminated field diaphragm	Function test: – Play-free adjustability of focus, zoom and illuminated field diaphragm when adjusted manually	
Objective lens, tube and other accessories mounted on the OPMI (camera, etc.):	Function test: Attached parts without mechanical play, knurled screws tightened and other removable microscope components securely mounted	

Component	Inspection features and acceptance criteria	Comments
Foot control panel	Visual inspection and function test: – Dust and spray water protection complete and undamaged	

Every 2 years

Light source: optical filters	– Check the light source filters	
Foot control panel	Replace foot control panel every two years.	

Every 4 years

Carrier system including microscope mount	Visual inspection: – No signs of wear on the supporting structure – No signs of wear or damage on the interfaces and couplings	
Cables, plugs and switches	Visual inspection: – Undamaged insulation and connectors on system/cable – Check cable guide including fasteners	
Casters (floor stand only)	We recommend replacing the casters	

Technical safety check

CAUTION

Risk of injury!
Cables and plug connections may come loose and parts of the housing may become live.

- Make sure that the regular technical safety checks required for this system in accordance with the applicable national regulations are performed on schedule and to the stipulated extent.

To prevent any impairment of the system's safety as a result of aging, wear etc., the operating company must ensure, in accordance with the applicable national regulations, that the regular technical safety checks defined for this system are performed on schedule and to the stipulated extent.

The safety checks may only be carried out by the manufacturer or by qualified persons.
The scope of the safety checks of the system should comprise at least the following points:

- Availability of the Instructions for Use
- Visual inspection of system and accessories for damage and legibility of labels
- Leakage current test
- Test of protective ground conductor
- Function and wear test of brakes (locking tabs)
- Function test of all switches, buttons, sockets and indicator LED of the system
- Locking screws are in place and tightened

Care of the device

Cleaning

Cleaning optical surfaces

The multi-layer T* coating of the optical components (e.g. eyepieces, objective lenses) ensures optimum image quality.
Image quality is impaired by even slight contamination of the optics or by a fingerprint. To protect the internal optics from dust, the system should never be left without the objective lens, binocular tube and eyepieces. After use, cover the system to protect it from dust. Always store objective lenses, eyepieces and accessories in dust-free cases when they are not being used.

Clean the exterior surfaces of the optical components (eyepieces, objective lenses) only when necessary:

- Do not use any chemical cleaning agents.
- Remove dust from the optical surfaces using a squeeze blower or a clean, grease-free brush.

For the regular cleaning of objective lenses and eyepieces of the surgical microscope, we recommend the optics cleaning set available from ZEISS. For the catalog number, please see the section "System data - Ordering data".

Prevention of fogging

To protect the eyepiece optics from fogging, we recommend using an anti-fogging agent. Anti-fogging agents provided by eyecare professionals for use with eyeglass lenses are also suitable for Zeiss eyepieces.

- Please observe the Instructions for Use supplied with each anti-fogging agent.

Anti-fogging agents do not only ensure fog-free eyepiece optics. They also clean the eyepiece optics and protect them from dirt, grease, dust, fluff and fingerprints.

Cleaning mechanical surfaces

All mechanical surfaces of the system can be cleaned by wiping them with a damp cloth. Do not use any aggressive or abrasive cleaning agents.

Clean off any residue using a mixture of 50% ethyl alcohol and 50% distilled water plus a dash of household dish-washing liquid.

Sterilization

CAUTION

Risk of infection caused by contaminated asepsis accessories and drapes!

- Only use sterile asepsis accessories and drapes suitable for the system!
- The products contained in the asepsis sets must be cleaned, disinfected and sterilized before each use. This also applies to the first use after delivery.
- Make sure that the operating staff is briefed about the sterile operation of the system.

The asepsis sets available from ZEISS contain rubber caps and hand grips which can be sterilized in autoclaves. For detailed information on sterilization please see the enclosed instructions "Preparation of resterilizable products" for the respective asepsis set.

Sterile single-use drapes are available to cover the system.

- When draping the system, make sure there is enough slack in the drapes to allow for movement of the microscope carrier and surgical microscope.

Disinfection

If the system surfaces need to be disinfected, please note the following:

NOTE

Risk of damaging the paint on the device!

- Use a disinfectant based on aldehyde or alcohol. The addition of quaternary compounds is acceptable.
  To avoid damaging the surfaces, do not use any disinfecting components other than those specified below.

The maximum concentrations are:

– For alcohol (tested with 2 propanol): 60%

– For aldehyde (tested with glutaraldehyde): 2%

– For quaternary compounds (tested with DDAC): 0.2%

Environmental protection measures

Note on disposal

User information
on the disposal of electrical and electronic devices

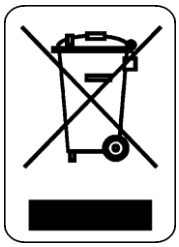

This symbol means that the product must not be disposed of as normal domestic waste.
The correct disposal of electrical or electronic devices helps to protect the environment and to prevent potential hazards to the environment and/or human health which may occur as a result of improper handling of the devices concerned.
For detailed information on the disposal of the product, please contact your local dealer or the device manufacturer or its legal successor. Please also note the manufacturer's current information on the Internet. In the event of resale of the product or its components, the seller is required to inform the buyer that the product must be disposed of in accordance with the applicable national regulations currently in force.

For end customers in the European Union

Please contact your dealer or supplier if you wish to dispose of electrical or electronic devices.

Information on disposal in countries outside the European Union

This symbol is only applicable in the European Union. For the disposal of electrical and electronic devices, please observe the relevant national legislation and other regulations applicable in your country.

Disposal of outer packaging material

- In order to dispose of outer packaging materials please refer to the local guidelines and bylaws.

System Data

TECHNICAL DATA **114**

EMC (ELECTROMAGNETIC COMPATIBILITY) **118**

Electromagnetic interference *119*

Electromagnetic immunity for ME equipment and ME systems *120*

Electromagnetic immunity for non-life-supporting ME equipment and ME systems *121*

Recommended safety distances between portable and mobile RF communication equipment and the OPMI LUMERA 300 ..... *123*

SYSTEM COMBINATIONS **124**

ORDERING DATA **125**

REGULATORY INFORMATION **126**

ENVIRONMENTAL CONDITIONS **127**

Technical data

Electric system

Component	Feature
Power connection	Only connect the device to wall outlets which are equipped with a properly connected protective ground conductor.
Rated voltage	100VAC - 240 VAC
Current consumption	max. 60 VA
Rated frequency	50 - 60Hz
Fuses	Automatic thermal circuit breaker
Electrical interfaces	Power input 100VAC - 240 VAC, max. 5 A Foot control panel connector Integrated video unit interface (optional): – HDMI
LED light source with temperature sensor	Color temperature: approx. 4500 K (± 500 K)
	Rated power: approx. 5 W
	Retina protection filter.
	Service life: approx. 70% brightness after 50,000 hours
The device is designed for continuous operation.	

.

Mechanics

Component	Feature
Microscope tilt mechanism	Tilt angle from +30° to -90°
XY coupling	Traversing range: max. 60 mm x 60 mm
	Automatic centering at the push of a button
	Weight approx. 3 kg
Weight of microscope	approx. 3.6 kg (without tube, objective lens and eyepieces)
Suspension arm	Length: 600 mm
	Swivel angle: ±150°
	Vertical lift: ± 300 mm (height of center position: 1434 mm)
Carrier arm	Length: 500 mm
	Swivel angle: 360°
Stand height	1735 mm
Base (dimensions)	Approx. 600 x 600 mm
Maximum permissible weight load of suspension arm	With complete microscope equipment, including accessories: - must not exceed 9.5kg for floor stand S200-cataract; - must not exceed 13.5kg for floor stand S200-retina
Total weight of OPMI LUMERA 300	– OPMI with floor stand S200-cataract: approx. 102 kg (without accessories); – OPMI with floor stand S200-retina: approx. 160 kg (without accessories); Please refer to the maximum load limit label on the corresponding place on the floor stand.

Fig. 33: OPMI LUMERA 300 dimensions

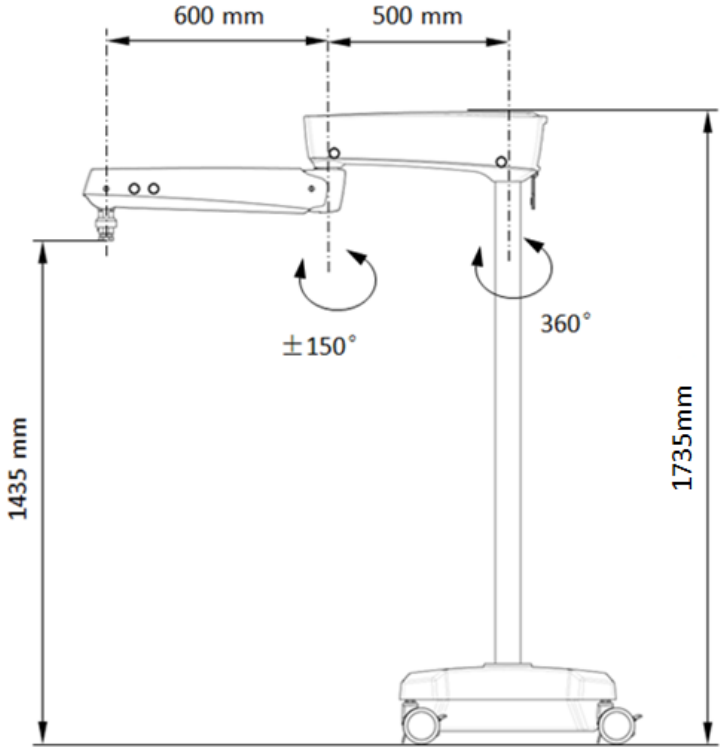

Optics

Component	Feature
Magnification	5-step apochromatic magnification changer, manual or motorized, magnification factors: 0.4 / 0.6 / 1.0 / 1.6 / 2.5
	4.3x - 25.5x motorized zoom system with apochromatic optics, 1:6 zoom ratio, magnification factor γ = 0.4x - 2.4x.
Focusing	Motorized, focusing range 50 mm.
Focal length of objective lens	f = 200 mm
Tubes / eyepieces	45° inclined tube, f = 170 mm
	180° tiltable tube, f = 170mm (optional)
	Invertertube (optional)
	10x or 12.5x widefield push-in eyepiece
Illumination	Filter protect the patient's eye against unnecessary exposure to radiation (blue light). Red reflex (by dialing different combination between 2° and 6°, you could get different red reflex effect.).

EMC (electromagnetic compatibility)

When using the device, the EMC precautions specified below must be observed.

- Only use spare parts approved by ZEISS for this device.
- Do not use any portable or mobile RF communication equipment in the vicinity of the device as this may impair the device's function.
- Do not use a mobile phone in the vicinity of the equipment because the radio interference can cause the equipment to malfunction. The effects of radio interference on medical equipment depend on a number of various factors and are therefore entirely unforeseeable.
- Please note the EMC guidelines on the following pages.

Electromagnetic interference

The OPMI LUMERA 300 is intended for operation in an electromagnetic environment as specified below. The customer or the user of OPMI LUMERA 300 is responsible for ensuring that the device is operated in such an environment.

Interference measurements	Compliance	Electromagnetic environment - guidelines
RF emissions as per CISPR11	Group 1	The OPMI LUMERA 300 uses RF energy only for its internal functions. As a result, RF emissions are very low and unlikely to cause any interference in nearby electronic devices.
RF emissions as per CISPR11	Class B	The OPMI LUMERA 300 is suitable for use in all facilities including locations in residential environments and those directly connected to the public power supply network which also supplies buildings used for residential purposes.
Harmonic emissions as per EN 61000-3-2	Class A	
Emission of voltage fluctuations/flicker as per EN 61000-3-3	Compliant	

Electromagnetic immunity for ME equipment and ME systems

The OPMI LUMERA 300 is intended for operation in an electromagnetic environment as specified below. The customer or the user of the OPMI LUMERA 300 is responsible for ensuring that the device is operated in such an environment.

Immunity tests	IEC 60601 - test level	Compliance level	Electromagnetic environment - guidelines
Electrostatic discharge (ESD) as per IEC 61000-4-2	±6 kV contact discharge ±8 kV air discharge	±6 kV contact discharge ±8 kV air discharge	Floors should be made of wood or concrete or be covered with ceramic tiles. If the flooring contains synthetic materials, the relative humidity must be at least 30 %.
Fast transient/ burst immunity as per IEC 61000-4-4	±2 kV for power supply lines ±1 kV for input/output lines	±2 kV for power supply lines ±1 kV for input/output lines	The quality of the supply voltage should be that of a typical business or hospital environment.
Surges as per IEC 61000-4-5	± 1 kV phase-to-neutral voltage ± 2 kV phase/neutral to ground voltage	± 1 kV phase-to-neutral voltage ± 2 kV phase/neutral to ground voltage	The quality of the supply voltage should be that of a typical business or hospital environment.
Voltage dips, short interruptions and voltage variations as per IEC 61000-4-11	< 5 % U_T (> 95 % dip of U_T) for 0.5 cycle 40 % U_T (60 % dip of U_T) for 5 cycles 70 % U_T (30 % dip of U_T) for 25 cycles < 5 % U_T (95 % dip of U_T) for 5s	< 5 % U_T (> 95 % dip of U_T) for 0.5 cycle 40 % U_T (60 % dip of U_T) for 5 cycles 70 % U_T (30 % dip of U_T) for 25 cycles < 5 % U_T (95 % dip of U_T) for 5s	The quality of the supply voltage should be that of a typical business or hospital environment. If the user of OPMI LUMERA 300 requires continued function even in the event of interruptions in the power supply, we recommend to power the device from OPMI LUMERA 300 an uninterruptible power supply or a battery.
Power frequency (50/60Hz) magnetic field as per IEC 61000-4-8	3 A/m	3 A/m	Power frequency magnetic fields should be at levels typical of business and hospital environments.

NOTE: U_T is the AC supply voltage prior to application of the test level.

Electromagnetic immunity for non-life-supporting ME equipment and ME systems

The OPMI LUMERA 300 is intended for operation in an electromagnetic environment as specified below. The customer or the user of the OPMI LUMERA 300 is responsible for ensuring that the device is operated in such an environment.

Immunity tests	IEC 60601 - test level	Compliance level	Electromagnetic environment - guidelines
			Portable and mobile radio communication equipment should not be used closer to the OPMI LUMERA 300, including cables, than the recommended safety distance that is calculated using the equation applicable to the transmission frequency involved. Recommended safety distance:
Conducted RF disturbances as per EN 61000-4-6	3 $V_{effective\ value}$ 150 kHz to 80 MHz	3 V	$d = 1,17\sqrt{P}$
Radiated RF disturbances as per EN 61000-4-6	3 $V_{effective\ value}$ 80 MHz to 2.5 GHz	3 V/m	$d = 1,17\sqrt{P}$ for 80 MHz to 800 MHz $d = 2,33\sqrt{P}$ for 800 MHz to 2.5 GHz Where P is the output power rating of the transmitter in watts (W) according to the transmitter manufacturer's specifications and d is the recommended safety distance in meters (m). Field strengths from stationary RF transmitters, as determined by a site survey[a], should be less than the compliance level in all frequency ranges.[b] Interference may occur in the vicinity of equipment marked with the following symbol:

Note 1	At 80 MHz and 800 MHz, the higher frequency range applies.
Note 2	These guidelines may not apply in all situations. Electromagnetic propagation is influenced by absorption and reflection by structures, objects and persons.

Immunity tests	IEC 60601 - test level	Compliance level	Electromagnetic environment - guidelines

[a] Field strengths of stationary transmitters such as base stations for mobile telephones and mobile land radio equipment, amateur radio stations, AM and FM radio broadcast and TV broadcast transmitters cannot be theoretically predicted accurately. To assess the electromagnetic environment with respect to stationary RF transmitters, a site study of the electromagnetic phenomena should be considered. If the measured field strength in the location where the device is used exceeds the compliance levels indicated above, the device should be monitored to verify normal operation. If abnormal performance is observed, additional measures may be necessary, such as re-orienting or relocating the ME equipment or ME system.

[b] Field strengths should be less than 3 V/m over the frequency range from 150 kHz to 80 MHz.

Recommended safety distances between portable and mobile RF communication equipment and the OPMI LUMERA 300

The OPMI LUMERA 300 is intended for use in an electromagnetic environment in which RF disturbances are controlled. The customer or the user of OPMI LUMERA 300 can help prevent electromagnetic interference by maintaining a minimum distance between portable and mobile RF communication equipment (transmitters) and the OPMI LUMERA 300, depending on the output power of the communication equipment as specified below.

Rated output power of transmitter [W]	Separation distance depending on transmission frequency [m]		
	150 KHz to 80 MHz	**80 MHz to 800 MHz**	**800 MHz to 2.5 GHz**
	$d = 1,17\sqrt{P}$	$d = 1,17\sqrt{P}$	$d = 2,33\sqrt{P}$
0.01	0.12	0.12	0.23
0.1	0.37	0.37	0.74
1	1.17	1.17	2.33
10	3.69	3.69	7.38
100	11.67	11.67	23.33

For transmitters rated at a maximum output power not listed above, the recommended separation distance d in meters (m) can be determined using the equation indicated for each column, with P being the maximum output power rating of the transmitter in watts (W) according to the transmitter manufacturer's specifications.

NOTE 1	At 80 MHz and 800 MHz, the higher frequency range applies.
NOTE 2	These guidelines may not apply in all situations. Electromagnetic propagation is influenced by absorption and reflection by structures, objects and persons.

System combinations

The device OPMI LUMERA 300 can be extended to an already verified system with the accessories offered by ZEISS (please refer to the order data). This device combination has been approved by ZEISS.

Any additional equipment, or equipment other than specified above, which is connected to this system must demonstrably comply with the applicable standards or directives (e.g. IEC 60950 Standards for data processing equipment). Furthermore, all configurations must comply with the normative requirements for medical systems (see IEC 601-1-1:1990 or IEC 60601-1:2005, section 16).

Anyone connecting additional equipment to the approved device combination is a system configurer and as such responsible for compliance of the system with the normative requirements for systems. Please note that local legislation takes priority over the above-mentioned normative requirements. If you have any questions, please contact your local dealer or ZEISS Service.

Ordering data

Only operate the system with the accessories included in the delivery package and approved by ZEISS. You will find the contact responsible for orders in your country on this website:

www.zeiss.com/meditec

The product configurations, accessories and spare parts that are applicable for authorized ZEISS partners are stipulated by contract.

For more information, please contact your authorized ZEISS partner.

Microscope

Description	Cat. No.
OPMI LUMERA 300 Basic Microscope Head with manual Magnification Changer & integrated LED Light Source	305944-9001-000
OPMI LUMERA 300 Basic Microscope Head with motorized Magnification Changer & integrated LED Light Source	305944-9002-000
OPMI LUMERA 300 Standard Microscope Head with motorized Magnification Changer, integrated LED Light Source, & Assistant Interface	305944-9003-000
OPMI LUMERA 300 Standard Microscope Head with motorized ZOOM, integrated LED Light Source, & Assistant Interface	305944-9004-000
OPMI LUMERA 300 Advanced Microscope Head with motorized ZOOM, integrated LED Light Source, Assistant & RESIGHT Interface	305944-9005-000

xxxxxx-xxxx-xxx

Regulatory information

Description	Labeling
Electrical safety	The medical device meets the requirements according to – IEC 60601-1:2005,
	Classification according to level of protection against electrical shock: Protection class 1
	Protection rating (acc. to IEC 60529): IP X0
Electromagnetic compatibility	The medical device is allocated to class B (acc. to IEC 61000-3-2) in line with IEC 60601-1-2:2007.
Classification	The medical device is allocated to class I in line with appendix IX of the Medical Device Directive 93/42/EEC.
CE label	The medical device meets the essential requirements stipulated in appendix I to the Medical De- vice Directive 93/42/EEC. In line with appendix XII of the Medical Device Directive 93/42/EEC the medical device is labeled with CE

Environmental conditions

For operation

Properties	Admissible range
Temperature	+ 10 °C ... + 40 °C
Rel. humidity	30% ... 75%

For transportation and storage

Property	Permissible range
Temperature	- 40 °C ... + 70 °C
Rel. humidity (no dewing)	10 % ... 90 %
Air pressure	500 hPa ... 1060 hPa

Symbols for transportation and storage

Symbol	Meaning
	Top. Indicates the proper upright position of the package.
	Permissible temperature range Limit of storage and application temperature
	Permissible range of rel. humidity Limit of storage and application temperature
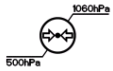	Permissible range of air pressure Limit of storage and application air pressure

Indexes

List of technical terms

Term	Explanation
Apochromatic optics	Optical system with maximum correction of chromatic aberration
Drapes	Sterile covers for surgical microscopes
Inverter	Used in posterior segment surgery for the correction of image orientation when using a fundus imaging system or wide-angle observation optics
Depth of field	Range of depth that appears sharply defined through the microscope
Radiation intensity	Radiation incident or emitted at right angles per unit time and unit area

List of abbreviations

Term	Explanation
AG	**A**ktien**g**esellschaft
BEV	**German acronym for "B**esondere **E**rsatzstrom-**v**ersorgung" (special backup power supply)
CE	**C**ommunauté **E**uropéenne (European Community) - The manufacturer declares that the device complies with the directives of the European Union.
DIN	**D**eutsches **I**nstitut für **N**ormung (German standards association)
D	Diopters (refractive power of optical systems)
EMC	**E**lectro**m**agnetic **C**ompatibility - defines non-interference of electrical and electronic devices with their environment

Term	Explanation
EN	**E**uropean **N**orm
RF	**R**adio **f**requency
IEC	**I**nternational **E**lectrotechnical **C**ommission
LED	**L**ight **e**mitting **d**iode
IOL	**I**ntra**o**cular**l**ens - artificial lens for the eye
OR	Operation
PD	**P**upillary **d**istance
T*	T* multi-coating - minimizes reflection
UV	**U**ltra**v**iolet

Keyword index

A

Address of manufacturer 2
After every use 19
Ambient requirements 11
Asepsis sets 86

B

Balancing the system 71

C

Carrier arm 54
Characteristics of illumination 20
Configuration
    Changing tubes, eyepieces, objective lens 65
Connecting the stand 73
Connection
    Mains input 116
    Power inlet 58
Connector
    foot control panel 75
Controls
    Microscope 47,
    Tubes 50
    Widefield eyepieces 51

D

Diopters
    Scale 51
    Setting ring 51
Disposal symbol 32, 39, 114
Drapes 88
Duration of exposure to light 22

E

Electrical safety 11
EMC (electromagnetic compatibility) 120
Emergency backup power supply 10
Exposure time to light 22
Eyecup 51
Eyepiece
    Adjusting 84

F

Failure of a major function 99
Failures
    LED light source 102
Field of use 9
First use 14
Foot control panel 60

H

Hazard symbols 7

I

Illumination
    Angle 21
    Characteristics 20
    Intensity 20
Illumination Duration 22
Illumination knob 52
Information symbols 7
Intended use 9
Interpupillary distance, adjustment 83

K

Key to symbols 7

L

LED light source
Max. radiation exposure times of illumination 24
Legal regulations 10
Light source
Failure 104

M

Magnification Changer 48
Malfunctions
Device 103
Manufacturer 2
Manufacturer's address 2
Microscope 45
Mobile phones 120

N

Normal use 9

O

OPMI 42
Operation 90
Optical surfaces, cleaning 112

P

Powering the system up/down 91
Preparation for the sterile use 86
Procedure 95
Protective ground conductor 14

R

Rating label 34, 36, 38, 39

S

Safety
Devices 26
Safety check 111

SIP label 32
Stand
Base 54
Column 54
Sterilization 113
Strain relief device 58, 76
Surgical microscope
Configuration 65
Surgical microscope, adjustment 83
Suspension arm 56
Symbols and labels on the device 28
Symbols for transportation and storage 131
System overview 43

T

Target group 8
Tilt 82
Trademarks 2
Transport 12
Tubes, eyepieces or objective lens, change of 65

V

Ventilation screen 66

X

XY coupling, failure 99

Carl Zeiss Suzhou Co., Ltd
Modern Industrial Square 3-B,
No.333 Xingpu Road
Suzhou Industrial Park, Suzhou
China 215126
Phone: +86 512 6287 1388
Fax: +86 512 6287 1115

EC REP **Carl Zeiss Meditec AG**
Goeschwitzer Strasse 51-21
07745 Jena
Phone : +49 36 41 22 03 33
Fax : +49 36 41 22 01 12
Email: surgical@meditec.zeiss.com
Internet: www.zeiss.com/meditec

000000-2111-120, V03